WUFR-25

~~Leslie Alfaro~~, Jesse Koeppel
Suspension

Steering Final Design Review

5th August 2025

OVERVIEW

The steering system's main goal is to allow the driver to safely maneuver the vehicle. The system consists of the following components: steering rack, steering wheel, steering wheel quick release, steering rack, steering column, tie rods, and sensor mounts.

The system requirements are that it must offer sufficient precision and stiffness so that the drive can feel what is happening at the front contact patches, have quick response time so that the vehicle's response to steering and to steering corrections is instantaneous, offer enough feel so that the driver can sense what is happening as he approaches the cornering limit of the front tires, and have some self returning action, but it cannot be so heavy as to cause fatigue.

Our team chose a bevel gear system because it maintains a consistent 1:1 motion transmission throughout the steering range. In contrast, a double U-joint system introduces slight variations in the steering ratio as it rotates. Another issue with double U-joints is that each joint has a maximum operating angle, and when you combine this limitation with where we have to mount our steering rack due to chassis constraints, we'd end up with a steering wheel angle that's uncomfortable for the driver.

WUFR-25 DESIGN RECAP

Last year's design aimed to solve two major issues with the previous year's design. The gearbox was supposed to be 2 inches in width to fit within competition rules, but manufacturing inaccuracies made it come out slightly too big. The gears would lock up because the mounting system wasn't rigid enough, and the gears had to be cut by hand. This combination led to the gears being spaced incorrectly, causing them to jam and wear unevenly.

The WUFR-25 design addressed these issues through stiffer bevel box internals that maintain constant mounting distance and precision shims that enable optimal gear meshing, similar to commercial gearboxes. The gearbox housing was reduced to 47mm, providing 3mm (0.118 in) clearance from the template.

The weaknesses from WUFR-25 that this new design is addressing is the high steering effort that judges pointed out during competition. Our recent Parked Steering Effort Test measured 35.12 Nm on average, similar to the calculated value of 34 Nm. Aside from getting more points at competition, we hope that this new design will help reduce driver fatigue and improve lap time consistency.

The WUFR-26 design intenceds to maintain component similarities with the 25 car; thus, we will continue using the NARRco steering rack. The NARRco is both light and can be bought with 3.5 and 4-inch rack speed, giving us more options in the geometry department to reduce steering effort. The full analysis from previous years regarding rack choice can be found here.

Steering decision

The Ackermann geometry for this year's steering system was optimized specifically for the tightest expected corner radius in competition (4.5m, ~2.25m centerline radius), while taking into account packaging constraints—particularly clearance with the A-arms. As the Ackermann percentage increases, the inside front wheel turns more sharply, potentially bringing it closer to the A-arms and risking interference. For an SAE car, which operates at relatively low speeds with some weight transfer, a target Ackermann percentage of 60–80% is typically recommended. In our case, based on known wheel travel limits and a design target of 33° for inside wheel steer and 25° for outside to attain a turning radius as close to the centerline without a-arm interference of the wheel barrel (this is about 2.8m at 33° [note this changes throughout different wheel angles, which is why we calculate and graph ackermann]), our calculated Ackermann percentage

is approximately 75.4%, using a 60.5" wheelbase and 48.5" front track. Given our use of anti-roll bars and a chassis that limits excessive weight transfer, a higher percentage within that range was deemed optimal. Therefore, 75% Ackermann was selected as a balanced target between steering responsiveness and mechanical packaging safety. ~~This info comes from Design Considerations of an FSAE Steering System. Not exactly the most credible paper, but this Ackermann percentage has worked for us in the past.~~

The tie rod lengths and geometry were optimized using SolidWorks motion simulations. The chosen geometry supports the target Ackermann characteristics while reducing bump steer by maintaining coplanarity between the instantaneous center and tie rod pickup points.

Initially, on the WUFR 25, the steering rack was installed in reverse, positioning the pinion farther from the driver. While this allowed easier access to mounting pins during installation, it unintentionally reversed the steering direction, as the rack is designed to operate in only one orientation. To correct this, the rack was flipped, bringing the pinion closer to the driver. Last year's car had the rack mounted with only a single truss because of this, and there were a number of issues trying to get the bevel box to mount correctly.

Anyways, more important to list here is the final geometry. We ran into a couple of pretty big issues in August regarding the fitment of the steering rack with the original inboard pickup points.



Max provided two alternatives that would've worked best within the confines of rule-fitting chassis configs. I ended up picking the second one for a couple of reasons. One, it better retains the Ackermann characteristics we were shooting for without compromising on steer angle, and Two, better accommodates the chassis node there. There were originally some concerns with the A-Arm clearance, being the tie rod less than 10th from the upper aft-tube, but the A-arms were adjusted to accommodate. The second two sets of adjustments were in relation to the

vertical position of the steering rack, being that the pickup points with fasteners didn't a) have enough room to clear, and b) didn’t have enough room to clear in case the rack deflected.

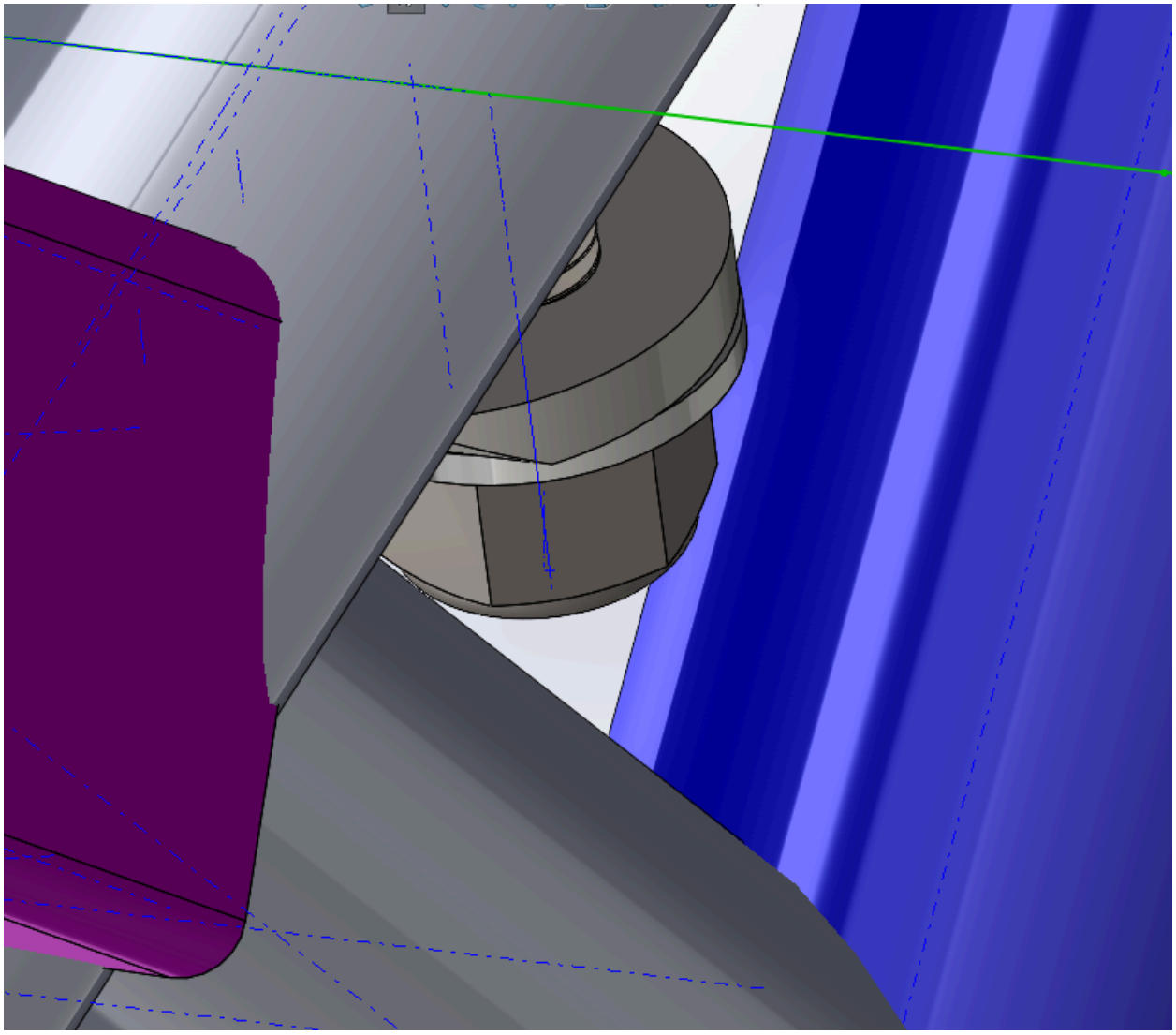

Moving the rack up about a 10th of an inch fixed this problem enough for me to be comfortable with its position. Here’s the final fitment check with the finalized steering geometry below. This change is necessary, and is changing the coplanarity between the tie rod and instant center (it’s not exactly like we’re concerned with bump steer here, since the driver should [hopefully] be holding the steering wheel while they're driving.

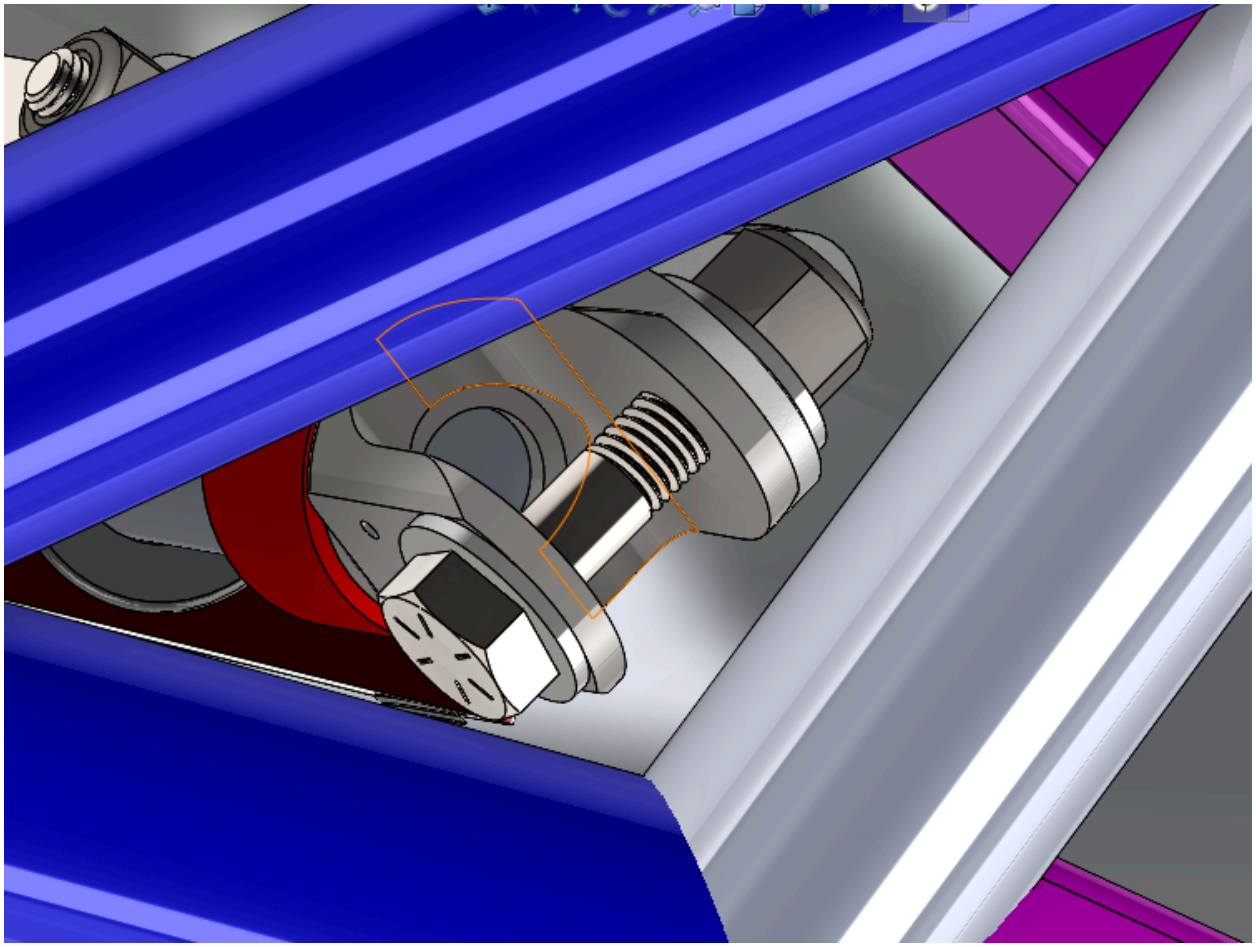

It fits!

Note for future reference: assembly is held together by hopes and dreams. Even breathing on it too hard will cause it to shit itself.

SO EVERYONE KNOWS, here is the FINAL geometry specifications:

	0.5-inch Back
Rack Offset (in)	3.12
Rack Ratio / C-factor (in/rev)	3.5
Rack Displacement (in)	1
Tie Rod Length (in)	13
Steering Arm Length (in)	2.75
Right Turn Angle (deg)	22.22
Left Turn Angle (deg)	32.81
Steer Input (deg)	102
Effort Decrease	14%
Tie Rod Inner (mm)	[-79.298, 220.980, 162.865]
Tie Rod Outer (mm)	[-61.933, 549.102, 192.223]

Your best reference, though, will always be importing the “geometry final” file and referring to the rack and tie rod placement highlighted in green.

DESIGN GOALS & TARGETS

Points and Car Goals

~~A points analysis in this PDR is going to be a little tricky, since most of the work done to test for Ackermann is supposed to be done between the PDR and FDR, but~~ based on the second set of motion studies (explained in the next portion), and some baseline matlab ackermann sims, we can make some inferences about how the car will perform in certain events. ~~This will be written on more before the FDR when we have a better understanding of how the full system reacts after some tuning.~~

The order in which I'm explaining things here is a little weird, since this is more or less the last step that happens within all the simulations, but it'll make the most sense if put here. The first image is the 2025 steering geometry sim, and the second image is 2026.

The Geometry used for this sim is based on Test 3 (check Math/Equations), since that was what was chosen to design the 2026 geometry around.

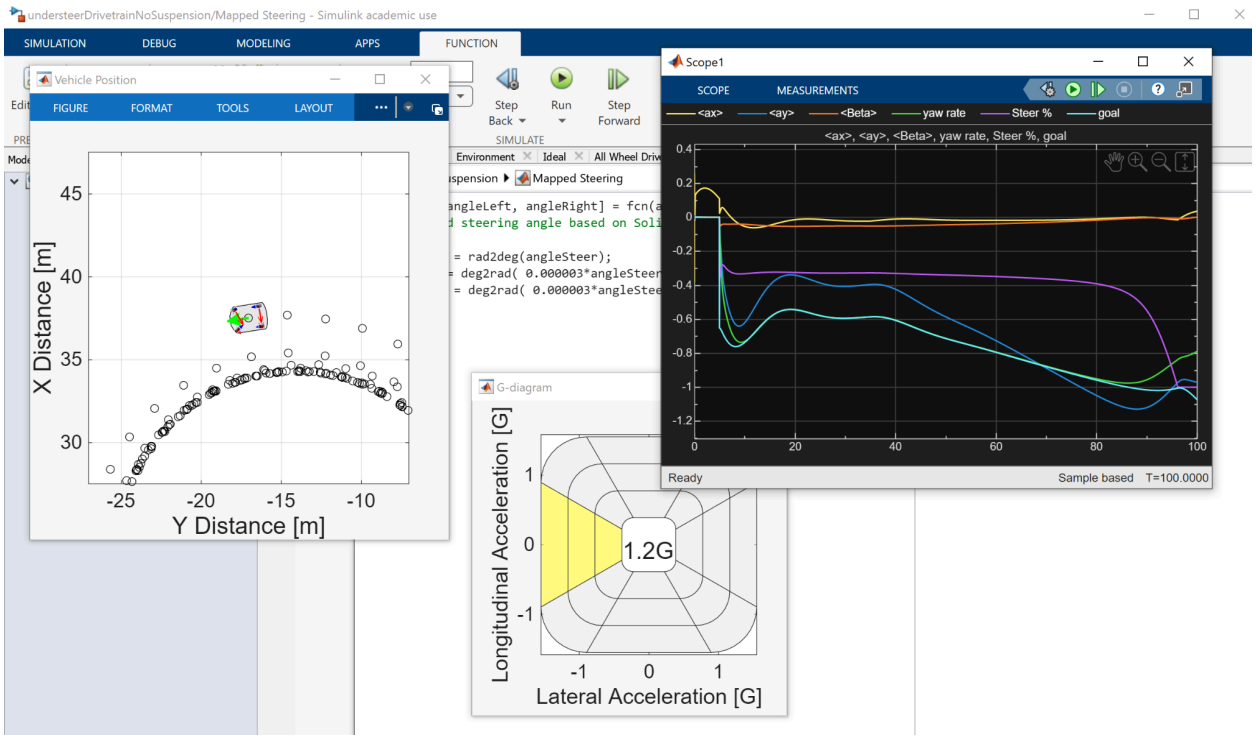

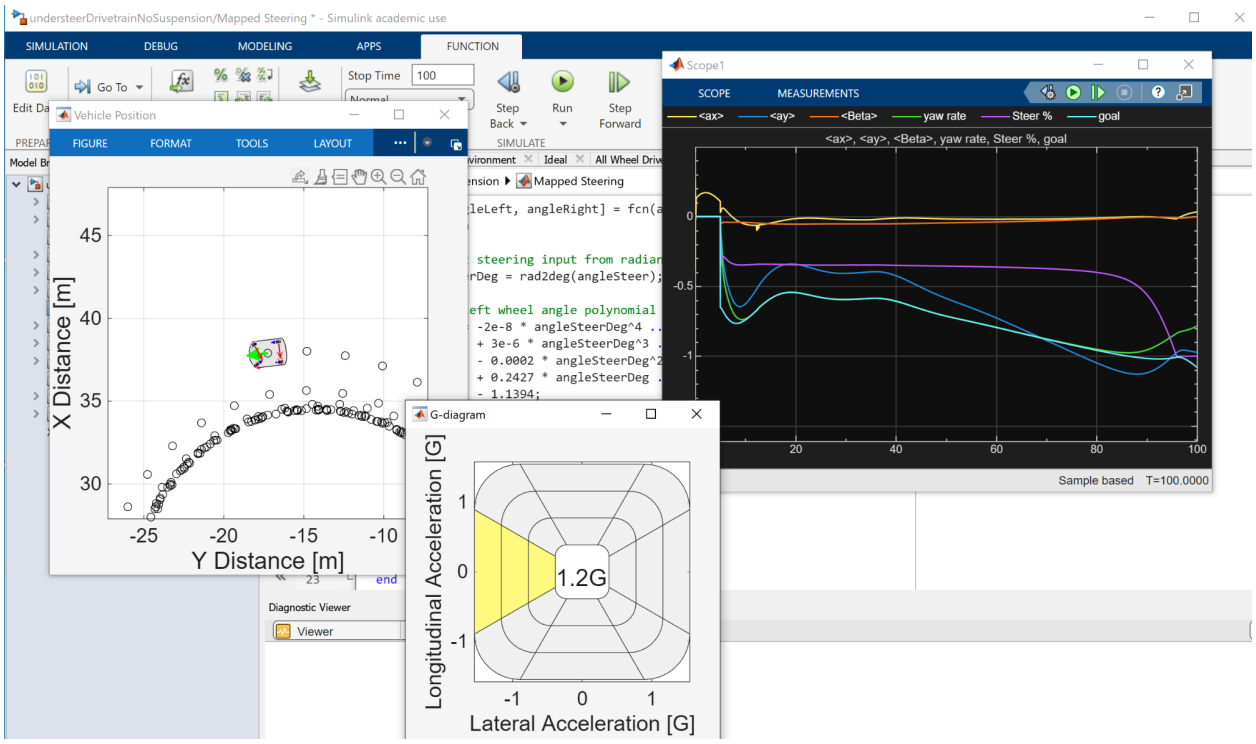

There are a couple of things to note here (the graph scale is a little misleading here, so you'll have a better understanding of what the effect is if you look at the points in the Vehicle Position animation after the car begins to understeer).

- The Test 3 Geometry has better early corner behavior, the tires are used more efficiently throughout the turn (flatter graph with marginally higher steer%).
- The car is more predictable in quasi-steady state cornering (Yaw rate aligns more smoothly with the goal signal).
- Slide slip is less severe.
- Understeer happens later.
- Really, the only two downsides of this configuration on paper are less steering angle at full lock (reference the Math/Equations for these figures), and the fact that it oversteers just a little bit more when the tires begin to slip.

Skid Pad:

- Increasing average lateral G by ~0.05-0.1g

Just based on when the car begins to understeer, we can see ~0.20s off time from 2025, which will be an increase of ~10+ to 12+ points.



Autocross + Endurance:

- Sharper steering and reduced steering effort

This is a little more subjective, since steering effort is more of a difficult metric to measure in improvement. Skid Pad pretty much just measures how well a suspension setup is set up, so we can gauge based pretty solely on understeer graphs in Ackermann simulations, while in Autocross and Endurance, the benefit of a sharper steering system that understeers later in low-speed corners is a little bit harder to judge.

~~Let's say the drivers REALLY like the new steering system and can complete the course without penalties and shave 3 seconds off the time because we hit slow speed corners like CRAZY, we'll see a ~20+ to 30+ point increase here.~~

Going to be more realistic about the points in autocross, any of the assumptions I make here are within a huge margin of error by nature of shitty MATLAB code, so I'll start off with a measurable metric. With an increase in steering wheel input angle comes two things outside of pure effort reduction, which can be beneficial trade-offs over the increase in input angle. Firstly, you make steering more discrete, as in that it takes more input to get the wheel to the same angle. At least for new drivers, unless they're Max Verstappen, should increase the margin of error they have while turning since small input errors won't make as large a change in the angle of the tires, reducing that skill ceiling. Secondly, the time it takes to steer will also increase. I guess this might depend on the driver, since it'll take slightly longer to hit the max input angle, but being more of a byproduct of the first tradeoff, it should hopefully make the car more friendly to drivers without extensive experience.

I also want to note this: the steering effort reduction is simply a convention of this.

So, sort of hard to judge, but again, with high lateral consistency in a driver comes better driving in an ideal scenario, even a modest pace gain without last season's DNF, just based on lap pace (150.7s) will see some sort of point increase. Regarding the numbers themselves, we retain a steer angle <4.5m at the tightest, even with a steer angle of ~33 rather than 35, so we're still golden.

In terms of both endurance and autocross, we can approximate how cornering speed will scale with the increase of lateral grip we see in our skidpad test. This is far from accurate since I don't have any true or reliable oversteer data for this setup since the setup is all theoretical right now



(and really, how comfortable the driver is with the setup will have the most effect on times), but seeing as that velocity in a corner scales with the root of its lateral accel, if the lateral limit is increased by 0.05-0.1, in ideal conditions on the low end, should see a 0.7% decrease in lap time. Pulling baseline data from averages of a 22km track at about 1.1km per lap, with baseline lat grip from wheat being in the 1.25 average range, might see a 0.8 second decrease per lap. I'd say take these numbers with a grain of salt, this approximation of delta T pretty much assumes the entire track is a turn and is always hitting 1.25gs which is never the case, so these numbers are like somewhat bullshit (plus, the matlab has a margin of error too, so the data there is like mehhhh at best in terms of modeling actual performance increases over just seeing general trends), but is a 7 point increase for both events in these conditions. Still, do not trust these numbers since the best estimate I could give you requires me actually putting the car on the ground with this setup or legitimate kinematics software :/

Design Goals

The primary goal of this year's steering design is to significantly reduce low-speed steering effort, which has historically caused driver fatigue and negatively affected lap time consistency and driver accessibility. During the 2025 FSAE competition, multiple design judges specifically called out the excessive steering effort, making this a high-priority issue.

Based on ideal tie rod geometry alone, a 26% decrease in steering effort is theoretically possible by optimizing the steering arm length. Another major lever is the steering rack ratio. Switching from a 4 in/rev rack to a 3.5 in/rev rack could decrease required steering input by a theoretical 34%, albeit at the cost of increased steering wheel travel (this, though, would be bad).

The challenge lies in balancing steering wheel angle, driver comfort, and mechanical advantage. While keeping the 90/90 (degrees of wheel input per direction) setup from last year is desirable for ergonomics and responsiveness, it limits our ability to reduce steering effort. Attempts to maintain 90/90 with increased steering arm lengths or rack displacement cancel out the mechanical benefit, forcing us to accept larger steering wheel inputs to meet the target effort reduction.

The system is being evaluated with a NARRco 3.5 and 4 in/rev rack, chosen for its light weight, low cost, and favorable geometry relative to tie rod pickup points. While a faster rack (i.e., lower in/rev) would maintain compact wheel inputs, it would also negate any reduction in driver effort by removing mechanical advantage. Thus, the decision has been made to allow increased

steering input while maintaining consistent wheel angles and reducing driver force through leverage rather than speed.

The rack position is being held close to last year's layout to avoid complicating the mounting structure, but small changes—such as moving the rack rearward or lowering the bevel box—are being considered to help meet geometry and comfort goals. Limiting steering wheel travel with bump stops is also part of the strategy to preserve ergonomics.

Basically, if we want to preserve the current wheel angle performance while reducing effort, the only viable path is to increase steering wheel rotation beyond 90°. This has to do with the way input and output angles work. See math below, but the only way we can really reduce effort without reducing system compliance is by changing this input angle, remember work in = work out.

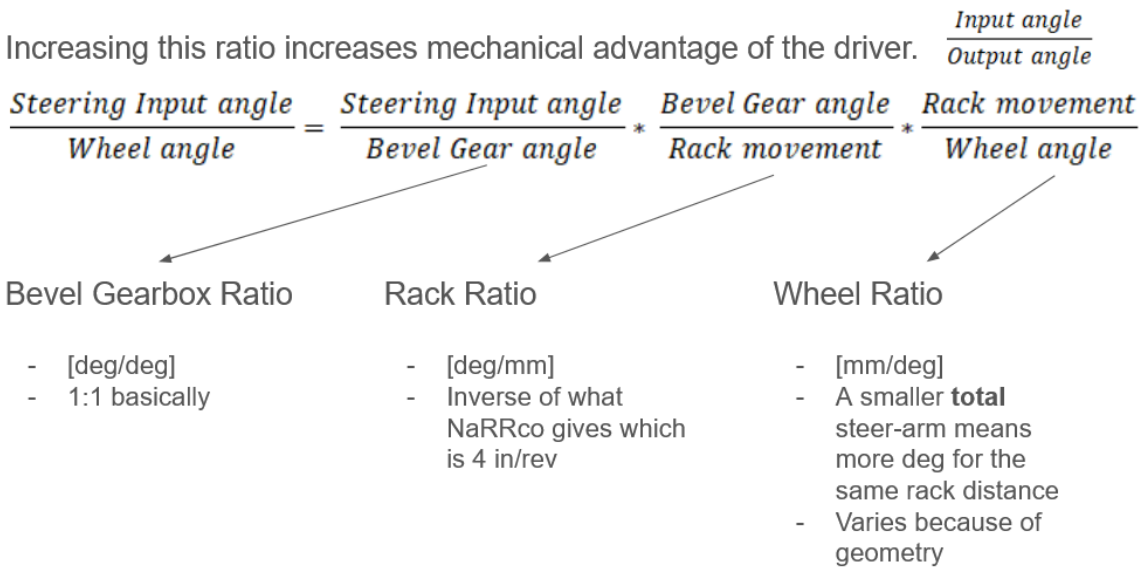

One of the critical constraints involves rack placement: placing the rack more than 0.75 inches behind the axle centerline results in interference with the yellow chassis tube (it's yellow in the 2025 CAD), setting that distance as our hard limit.

All things considered, we ran some SolidWorks motion studies to target these changes and get a baseline feel for how much we could actually reduce steering effort, and to give Erik options to work with for the geometry FDR. There are two of these we run here, the first to optimize values for the tie rod pickup points and rack movement by adjusting the rack displacement, and the second to validate the Ackermann based on that new geometry.

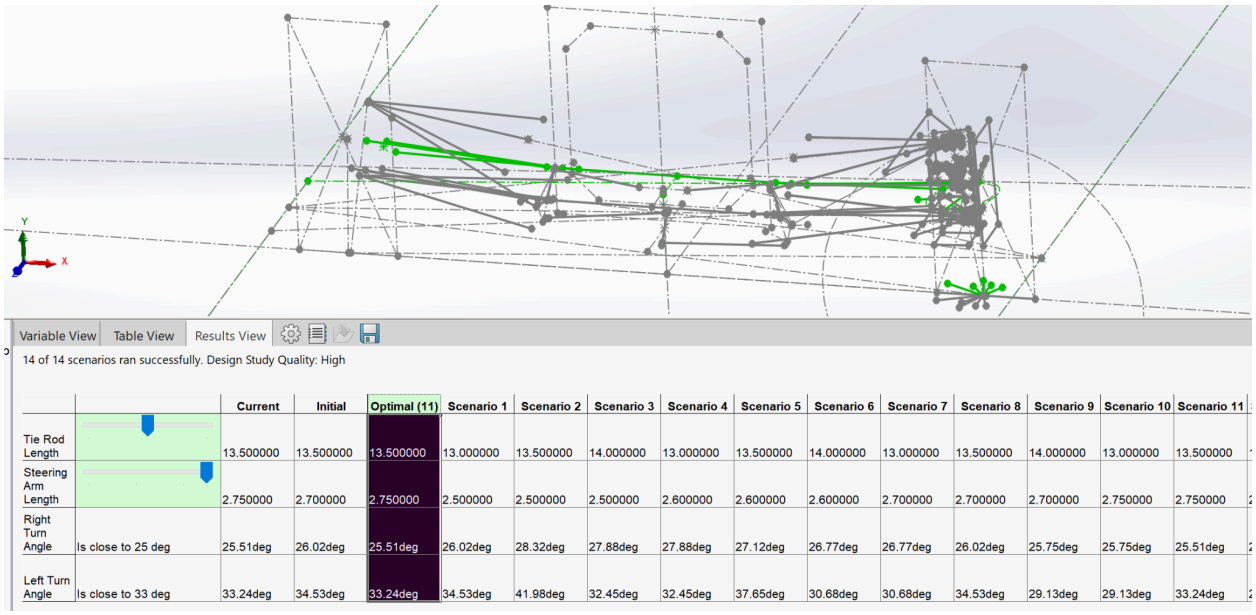

Variable View | Table View | Results View

14 of 14 scenarios ran successfully. Design Study Quality: High

		Current	Initial	Optimal (11)	Scenario 1	Scenario 2	Scenario 3	Scenario 4	Scenario 5	Scenario 6	Scenario 7	Scenario 8	Scenario 9	Scenario 10	Scenario 11
Tie Rod Length		13.500000	13.500000	13.500000	13.000000	13.500000	14.000000	13.000000	13.500000	14.000000	13.000000	13.500000	14.000000	13.000000	13.500000
Steering Arm Length		2.750000	2.700000	2.750000	2.500000	2.500000	2.500000	2.600000	2.600000	2.600000	2.700000	2.700000	2.700000	2.750000	2.750000
Right Turn Angle	Is close to 25 deg	25.51deg	26.02deg	25.51deg	26.02deg	28.32deg	27.88deg	27.88deg	27.12deg	26.77deg	26.77deg	26.02deg	25.75deg	25.75deg	25.51deg
Left Turn Angle	Is close to 33 deg	33.24deg	34.53deg	33.24deg	34.53deg	41.98deg	32.45deg	32.45deg	37.65deg	30.68deg	30.68deg	34.53deg	29.13deg	29.13deg	33.24deg

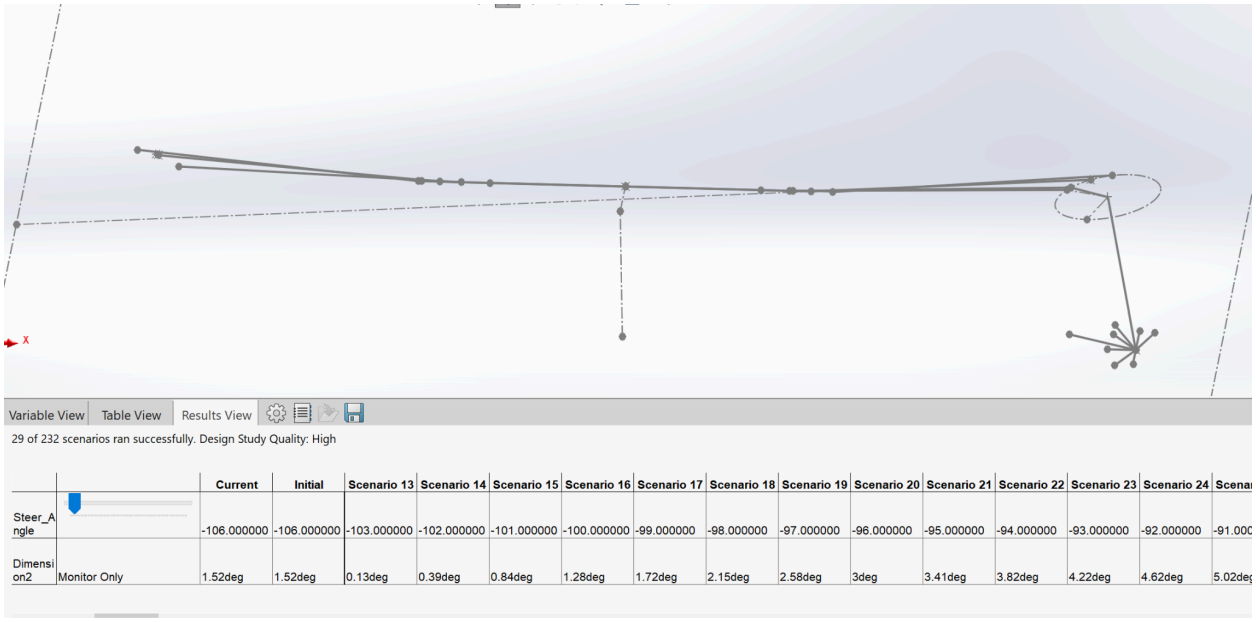

Variable View | Table View | Results View

29 of 232 scenarios ran successfully. Design Study Quality: High

		Current	Initial	Scenario 13	Scenario 14	Scenario 15	Scenario 16	Scenario 17	Scenario 18	Scenario 19	Scenario 20	Scenario 21	Scenario 22	Scenario 23	Scenario 24	Scena
Steer_Angle		-106.000000	-106.000000	-103.000000	-102.000000	-101.000000	-100.000000	-99.000000	-98.000000	-97.000000	-96.000000	-95.000000	-94.000000	-93.000000	-92.000000	-91.000
Dimension2	Monitor Only	1.52deg	1.52deg	0.13deg	0.39deg	0.84deg	1.28deg	1.72deg	2.15deg	2.58deg	3deg	3.41deg	3.82deg	4.22deg	4.62deg	5.02deg

The optimizations are to be set up with three primary design goals. First, we aim to maintain steering wheel input as close to 90 degrees as possible, with a hard upper limit of 115° and a soft constraint to stay within 90–110° for optimal driver ergonomics. Numbers here were taken from driver feedback. Second, we are targeting a 20% reduction in steering effort (SE) relative to last year's car. Third, we want to retain a similar Ackermann profile to the previous design to maintain tight low-speed cornering performance, particularly during the autocross and skidpad events.

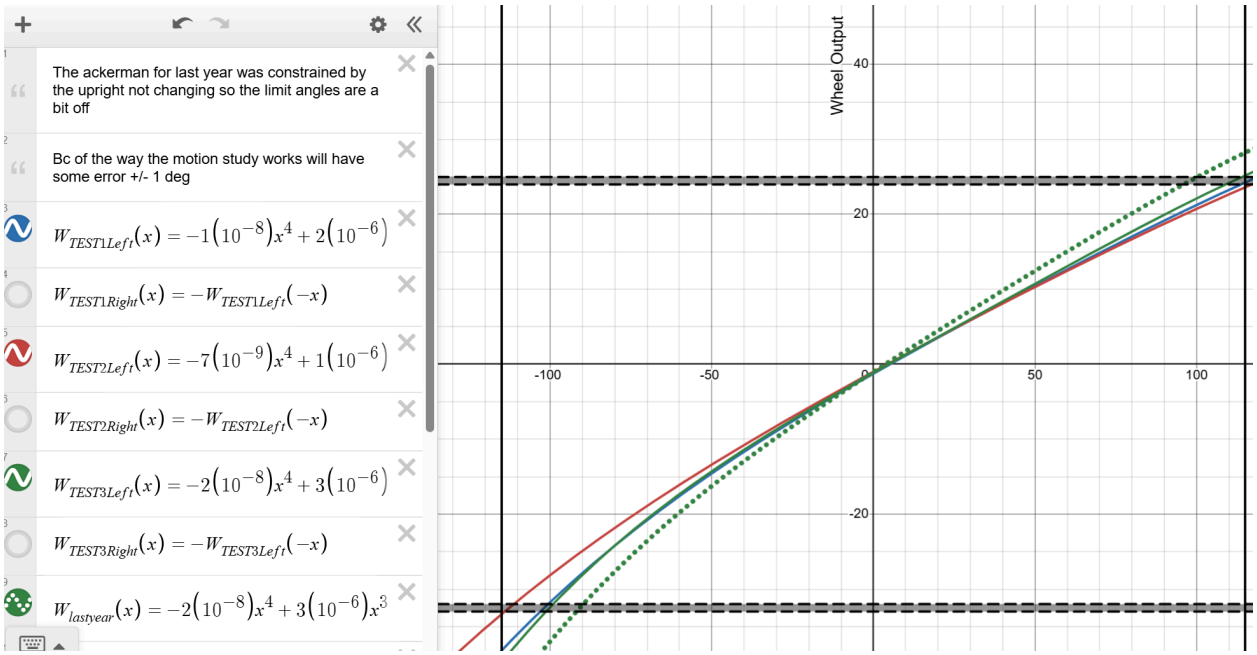

In evaluating design options, we used a weighted approach in simulation: achieving a true 90° steering input is prioritized at 70% importance, while reducing steering effort is weighted at 30%. Emphasis on driver control and feel, without ignoring the real gains in consistency and performance that come from lowering fatigue. The simulation helps us explore scenarios where we may slightly exceed the 90° input threshold if it leads to a significant effort reduction, provided overall Ackermann characteristics remain close to last year's optimized baseline.

Since things are moving quite a lot this year, we need to take extra consideration to maximize ergonomics here. To that end, I expect things to stay as close to the same as possible.

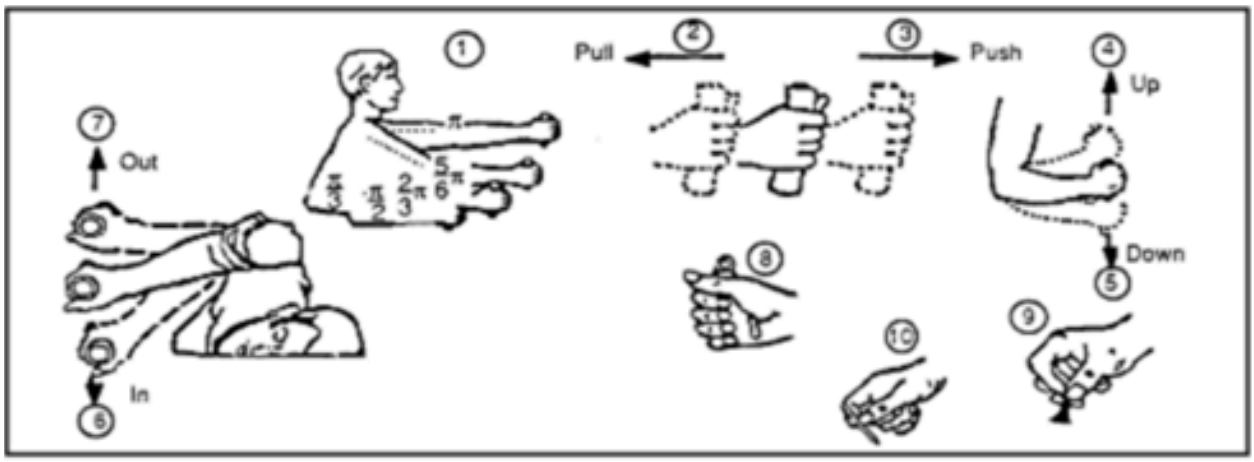

Figure 1. Arm, Hand, and Thumb/Finger Strength (5th Percentile Male Data)

1	2		5		6	
Elbow Flexion	Pull		Down		In	
	L	R	L	R	L	R
⅝ π	187	**249**	80	89	67	89
⅔ π	151	137	93	**116**	89	**98**

- Taken from the 2023 design brief. Numbers are Newtons

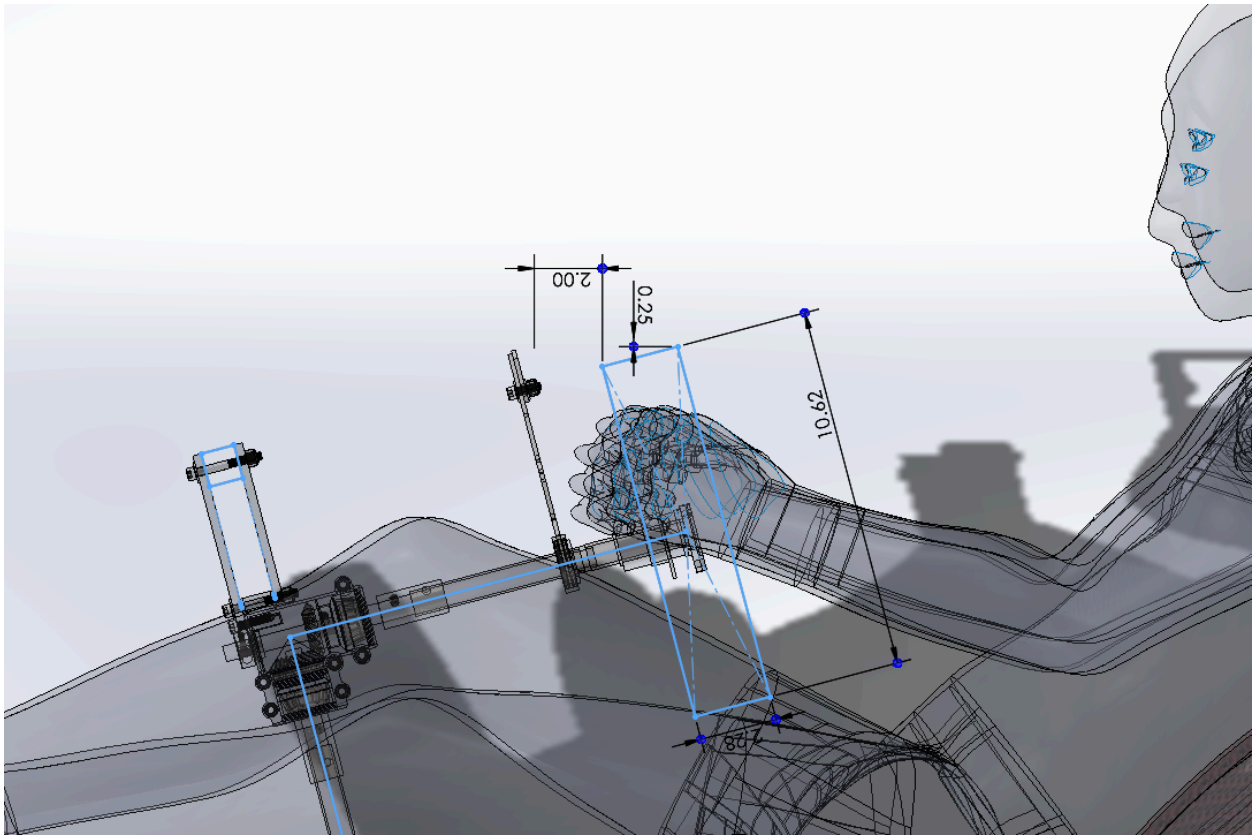

Things stayed relatively similar in terms of driver positioning since it's more about being rules-compliant. Basic dimensions listed here are the vertical distance between the top of the wheel and the driver's fingers, which must be 0.25 inches, the wheel dimensions, and the distance from the top of the truss. The distance from the truss has increased slightly to better position the wheel.

Design Decisions

I'll reiterate one very important thing off the bat: all steering is based on the geometry table posted above. All the design decisions under the steering effort listed below are reflected there as a number.

Steering Effort:

- To reduce steering effort, we are changing
    - Rack displacement
    - Rack mount position
    - Rack speed
    - and/or maximum steering wheel angle
- Moving the steering rack by ~~~1~~ 0.5 inch because the front axle is moving forward + chassis fitment. This is possible, chassis confirmed they can work with it. Last year it moved by ¼". Moving the rack forward beyond 1 will tend more toward parallel steer and eventually reverse Ackermann, but will increase the steer arm. The opposite is true for moving the rack back.
    - Pretty much all these things attempt to do is increase the steer arm, allowing more mechanical advantage to the tires. We found some happy middle grounds between all these variables and chose one, but this was later adjusted to accommodate fitment.
- Considering swapping out the steering rack before competition.
    - The NARRco rack wears down during testing (and supposedly do the other steering components), so a lot of teams do switch their racks or all steering components before competition. We should 100% consider budgeting for this rack swap, so this should also hopefully help with some of the backlash after normal wear and tear for comp performance.
    - We ARE doing this cause they gave me the budget for it lol.

Bevel Box:

- Maintaining the same 47mm gearbox from 2025
- Switched the Machined bearing spacer to one bought from McMaster. These are stackable, so it should cut down on needing to mess around with the sizing by hand
- Changing fastener sizing to accommodate fitting a nylon locking nut. This is a convenience thing; no one has the desire to safety wire it.

Bevel Gears and Shaft:

- Maintaining the same reduction in shaft size from ⅝” to 15mm.
    - There isn't a reason to revert this change. It was initially ⅝’ because it was the smallest size in which a key trench wouldn’t pose any issues under steering forces, but it limited the number of bearings and gears we could choose from. It wasn’t possible with the old shaft to bring the gears close enough, so they changed it.
    - Still using the custom shaft that can be welded to the gears, which also circumvents setscrews that need Loctite.
    - We didn’t have an issue welding this the last time, so we’ll stick with it.
    - Since the front Roll Hoop is moving down a half inch to meet the driver, the steering column will have to be shrunk as well. Free weight savings 🤷
- Reducing the length of the primary shaft and increasing the length of the steering column
    - This is more or less just a no-drawback way to reduce the mass of the steering column, since the steering column is a hollow tube and the primary shaft aint.
    - Reduces the range of adjustment the steering wheel has along the axis of the primary shaft, but we basically never touch this anyway.

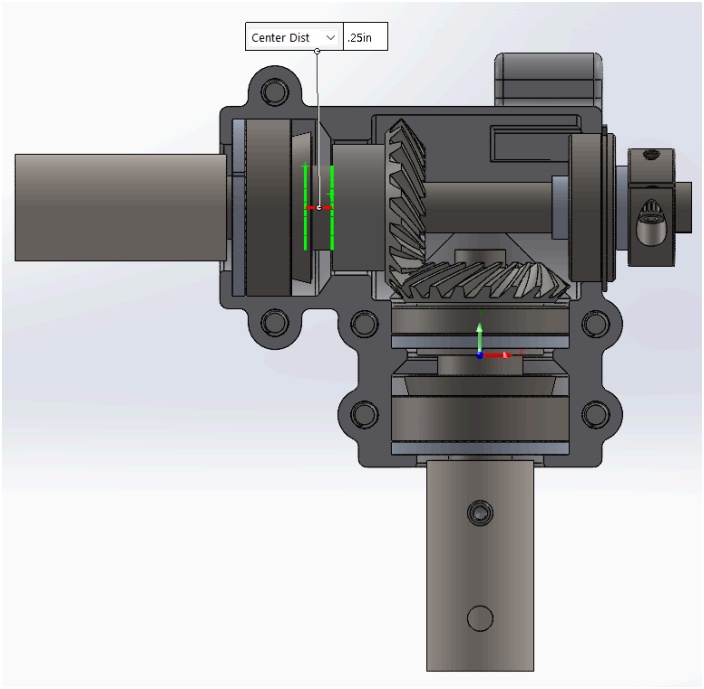

Mounting:

- We are NOT flipping the rack lol. Pinion AWAY from the driver.
- This will correct the mounting mistake from last year, so both brackets are in use.

- Chances are the brackets will change as the driver moves down. FEA from previous years in the Materials section for reference, since I don't expect it to change a whole lot.
- Updated the shock pot mounts to accommodate the steering rack placement change.
- Potential topology optimization of the brackets
    - Solidworks is being a pain in the ass about turning the static load case into a topology study, so it ain't done for the FDR, hopefully done before check-in.

Design Validation

Both the quantitative and qualitative aspects for validation here are going to be important.

- Steering Effort Test

There are a couple of options for this: parked and in motion.

    - Park the car, inflate tires to a nominal pressure, measure the torque using a stick of known length plus a gauge to measure weight/force (do some math here to figure out torque), and sweep through different angles using a digital angle encoder.
    - This apparently can also be done with strain gauges on the steering column, as per what one Reddit user said. I don't know exactly how this works, but it's probably a more accurate option.
    - There's also a way to do this using accelerometer data from Race Studio, calculating the steering torque from the tie rods. Also don't know how this works, exactly, but apparently it can be done.
- Driver Feedback
    - This one will be more effective since numbers don't mean a whole lot if it isn't felt by the drivers. If the drivers say there's an improvement, there is an improvement. If the drivers say there isn't, there isn't.
    - About how the setup performs while driving in regard to the Ackermann graph changes, this portion will be super important as the car will handle slightly differently in both quasi-steady and transient state cornering compared to last year.
    - I think the most important things to note here will be.
        - Has the driving effort improved
        - Does the car feel more or less understeery
        - Is the car more or less stable in skidpad
        - Has low-speed cornering improved
    - So testing both in *slaloms* and in *skidpad* are our best bet for these metrics.

DESIGN CONSTRAINTS

Rules

V.3.2 Steering

V.3.2.1 The Steering Wheel must be mechanically connected to the front wheels

V.3.2.2 Electrically operated steering of the front wheels is prohibited

V.3.2.3 Steering systems must use a rigid mechanical linkage capable of tension and compression loads for operation

V.3.2.4 The steering system must have positive steering stops that prevent the steering linkages from locking up (the inversion of a four bar linkage at one of the pivots). The stops:

> *a. Must prevent the wheels and tires from contacting suspension, bodywork, or Chassis during the track events*
>
> *b. May be put on the uprights or on the rack*

V.3.2.5 Allowable steering system free play is limited to seven degrees (7°) total measured at the steering wheel.

V.3.2.6 The steering rack must be mechanically attached to the Chassis F.5.14

V.3.2.7 Joints between all components attaching the Steering Wheel to the steering rack must be mechanical and be visible at Technical Inspection. Bonded joints without a mechanical backup are not permitted.

V.3.2.8 Fasteners in the steering system are Critical Fasteners, see T.8.2 V.3.2.9 Spherical rod ends and spherical bearings in the steering must meet V.3.1.5 above V.3.2.10 Rear wheel steering may be used.

> *a. Rear wheel steering must incorporate mechanical stops to limit the range of angular movement of the rear wheels to a maximum of six degrees (6°)*
>
> *b. The team must provide the ability for the steering angle range to be verified at Technical Inspection with a driver in the vehicle*
>
> *c. Rear wheel steering may be electrically operated*

T.1.2 Internal Cross Section

T.1.2.1 Requirement:

a. The cockpit must have a free internal cross section

b. The template shown below must pass through the cockpit

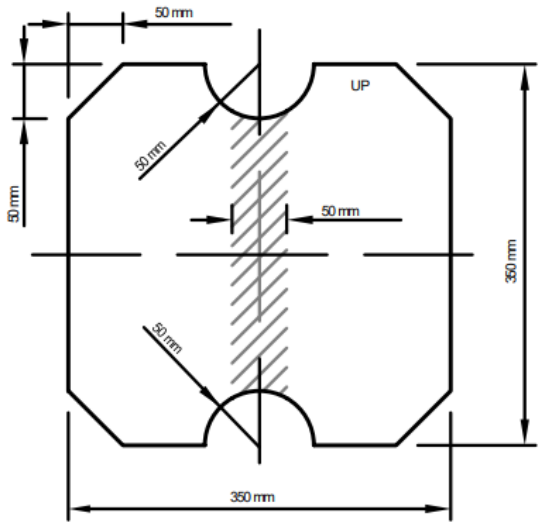

Template maximum thickness: 7 mm

T.1.2.2 Conduct of the test. The template:

a. Will be held vertically and inserted into the cockpit opening rearward of the rearmost portion of the steering column.

b. Will then be passed horizontally through the cockpit to a point 100 mm rearwards of the face of the rearmost pedal when in the inoperative position

c. May be moved vertically inside the cockpit

System Integration

- Chassis - Rack placement
- Chassis - Front suspension box
    - Chassis works around us for these things because we give them the geometry. They already have a setup we provided that Erik chose. When it comes to

fine-tuning and designing some of the major components in CAD, I'll rediscuss these two to figure out what we're working with in terms of where to mount things.

- Ergo - Driver down by 0.5 inch. ~~I don't know how Ergo wants to go about this, but I do know for a fact that the chassis isn't moving below the floor, so I'll talk to Ergo about this before steering FDR when the designs actually start being finalized. Chassis does plan on adjusting the front roll hoop, so the steering angle again shouldn't change.~~
- The steering rack offset changes positioning with the steering column as well, see image above, so column lengths and trusses need to be length adjusted when the chassis is done in CAD. Movement of the front will also change this if that's being moved too. See the image below. It's only being shrunk from the top, though, which means nothing changes here.

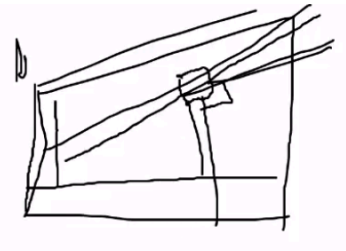

Limiting Factors

The Housing will be made once again with a 3D printer, and we have seen before that the tolerances in 3d printed parts are not always great. However, in 2024, it was made using FFF, while last year, it was Laser Sintering. Because this year it is an aluminum 3D print, it will be easier to sand in case it needs to occur.

A 47mm shaft without keys could make problems with set screws slipping at the couplers. If that occurs, it could be possible to manufacture the shaft to have a D profile for better set screw fastening. This didn't happen last year, but the possibility remains.

Welding the gears could lead to bending on the shaft; to restrict this, careful welding and jigging must occur. Additionally, it is hard to quantify how good a weld is, so we must perform torsion tests to verify its safety. If it is not safe, then we can buy new KHK Gears with larger ID and set screws so that we can manufacture a D-profile shaft.

The parked scrubbing forces get close to or go past the yield of the rack. This was also the case last year and the year prior, which led to the rack starting to slacken and backlash. Additionally, it



caused a lot of stress on the gears, which led to some problems. So we must have a strict rule of not turning the wheels while parked with someone in the car. ~~Again, with rack stress and issues in previous years, we should consider budgeting for a second rack.~~ We're budgeting for a second rack!!!

WUFR-25 vs WUFR-26 DESIGN COMPARISON

The only masses that should be changing on the 26 are the column mass. ~90 gram reduction or ~0.19 lbs. Not as much as I was hoping for, but this isn't too bad. I don't exactly know what's accounted for in last year's mass calculations, since it isn't listed, it might not include the brackets (I did for mine), so in that regard, yes, it's a weight reduction, but it probably is more than what's listed here.

No notable weight changes exist in the steering rack, nor do they in the bevel box.

WUFR-25 vs. WUFR-26 (*Subsystem Name*) Spec Sheet		
	WUFR-25	**WUFR-26**
Box Mass		
Part Weight	1164g	1164g
Any relevant parameters used in design (Fuel tank example: fuel capacity, material, length, width, height, etc)		
	Column Mass	
Part Weight	2120.70g	2031.13g
Any relevant parameters used in design (Fuel tank example: fuel capacity, material, length, width, height, etc)		
System Weight (SolidWorks)	**I can't find this number :/**	**80.95704961 lbs**

DESIGN MATERIALS

Code/MATLAB/Spreadsheets

Test 3 understeer code:

```
function [angleLeft, angleRight] = fcn(angleSteer)
    %#codegen

    % Convert steering input from radians to degrees
    angleSteerDeg = rad2deg(angleSteer);

    % TEST3 Left wheel angle polynomial (degrees)
    leftDeg = -2e-8 * angleSteerDeg^4 ...
              + 3e-6 * angleSteerDeg^3 ...
              - 0.0002 * angleSteerDeg^2 ...
              + 0.2427 * angleSteerDeg ...
              - 1.1394;

    % Reuse original Right wheel polynomial (until you have TEST3 right
data)
    rightDeg = 0.000003 * angleSteerDeg^3 ...
               + 0.0005 * angleSteerDeg^2 ...
               + 0.2826 * angleSteerDeg ...
               + 1;

    % Convert outputs to radians
    angleLeft = deg2rad(leftDeg);
    angleRight = deg2rad(rightDeg);
end
```

Gear Ratio Optimization:

```
% ----------------------------
% Gear Ratio Optimization Script
% Smooth Squared-Error Objective
% ----------------------------% Gear ratio range
x_vals = linspace(0.5, 2, 1000);% Constants
baseline_effort = 79.5 / ((360/4)*(1/25));  % ≈ 22.0833 Nm
target_effort   = 0.8 * baseline_effort;  % 20% reduction target% Adjustable
weights
w_input  = 0.5;  % Weight for steering input deviation
w_effort = 0.5;  % Weight for effort deviation% Effort and input functions
```



```
effort_expr = @(x) 79.5 ./ ((360/4) * (x/25));   % Effort in Nm
input_expr  = @(x) 90 * x;                       % Steering input in degrees%
Compute values
effort_vals = effort_expr(x_vals);
input_vals  = input_expr(x_vals);% Squared errors (normalized)
f1 = ((effort_vals - target_effort) / target_effort).^2;  % Effort loss
f2 = (x_vals - 1).^2;                                      % Input loss%
Total objective score
J = w_effort * f1 + w_input * f2;% Find optimal
[~, idx_opt] = min(J);
x_opt = x_vals(idx_opt);
optimal_effort = effort_vals(idx_opt);
optimal_input  = input_vals(idx_opt);
optimal_score  = J(idx_opt);
effort_drop_pct = 100 * (1 - optimal_effort / baseline_effort);% Display
results
fprintf('--- Optimal Gear Ratio Factor ---\n');
fprintf('x = %.4f\n', x_opt);
fprintf('Steering Input = %.2f deg\n', optimal_input);
fprintf('Steering Effort = %.4f Nm\n', optimal_effort);
fprintf('Effort Drop = %.2f%%\n', effort_drop_pct);
fprintf('Objective Score = %.4f\n', optimal_score);%% Plot 1: Effort and
Steering Input vs Gear Ratio Factor
figure;
yyaxis left;
plot(x_vals, effort_vals, 'b-', 'LineWidth', 1.5);
ylabel('Steering Effort (Nm)');
ylim([min(effort_vals)*0.95, max(effort_vals)*1.05]);yyaxis right;
plot(x_vals, input_vals, 'r--', 'LineWidth', 1.5);
ylabel('Steering Input (deg)');
ylim([min(input_vals)*0.95, max(input_vals)*1.05]);% Vertical lines
xline(x_opt, 'k-', sprintf('Optimal x = %.3f', x_opt), ...
    'LabelVerticalAlignment', 'bottom', ...
    'LabelHorizontalAlignment', 'right', ...
    'FontWeight', 'bold');xline(1, ':k', 'Baseline x = 1', ...
    'LabelVerticalAlignment', 'top', ...
    'LabelHorizontalAlignment', 'left');title('Steering Effort and Input vs
Gear Ratio Factor x');
xlabel('x (Gear Ratio Factor)');
legend('Effort (Nm)', 'Input (deg)', 'Location', 'best');
grid on;%% Plot 2: Objective Score
figure;
plot(x_vals, J, 'k-', 'LineWidth', 2); hold on;
xline(x_opt, 'r-', sprintf('Optimal x = %.3f', x_opt), ...
```

```
    'LabelVerticalAlignment', 'bottom', ...
    'LabelHorizontalAlignment', 'center', ...
    'FontWeight', 'bold');
xlabel('x (Gear Ratio Factor)');
ylabel('Objective Score J(x)');
title('Objective Score vs Gear Ratio Factor');
legend('Score J(x)', 'Optimal Point', 'Location', 'best');
grid on;
```

Math/Equations

$$\frac{Steering\ Input\ angle}{Wheel\ angle} = \frac{Steering\ Input\ angle}{Bevel\ Gear\ angle} * \frac{Bevel\ Gear\ angle}{Rack\ movement} * \frac{Rack\ movement}{Wheel\ angle}$$

Bevel Gearbox Ratio

- [deg/deg]
- 1:1 basically

Rack Ratio

- [deg/mm]
- Inverse of what NaRRco gives which is 4 in/rev

Wheel Ratio

- [mm/deg]
- A smaller **total** steer-arm means more deg for the same rack distance
- Varies because of geometry

	0.5-inch Back
Rack Offset (in)	3.12
Rack Ratio (in/rev)	3.5
Rack Displacement (in)	1
Tie Rod Length (in)	13
Steering Arm Length (in)	2.75
Right Turn Angle (deg)	22.22
Left Turn Angle (deg)	32.81
Steer Input (deg)	102
Effort Decrease	14%
Tie Rod Inner (mm)	[-79.298, 220.980, 162.865]



Tie Rod Outer (mm)	[-61.933, 549.102, 192.223]

Steering Length Optimization Tests						
	Last year	Test 1	Test 2	Test 3	Test 4	Test 5
Rack Offset	2.62	3.62	3.62	2.62	2.62	3.62
Rack Type	rack as before	rack as before	rack as before	New rack, 3.5	rack as before	rack as before
rack displacement (in)	1	1.25	1.275	1	1.20	1.20
tie rod length *(in)*	13.3	13.5	13.5	13	13.5	13.5
steering arm length *(in)*	*2.5*	*2.85*	*2.95*	*2.70*	2.70	2.75
right turn angle *(deg)* *(25 desired)*	*23.34*	*25.5*	*25.12*	*22.43*	25.85	25.51



left turn angle *(deg)* *(33 desired)*	*33.05*	*32.75*	*31.52*	*32.08*	31.73	33.24
Steer input *(deg)*	*90*	*112.5*	*115*	*102*	*108*	*108*
Steering effort decrease from 2025	*-*	*~26%*	*~27.5%*	*~14%*	*~20%*	
			Geometry			
Tie rod Inner Ball Joint	*OptK in inches: (-2.9, 8.3585, 6.6)*	***Updated is highlighted*** *(-91.998, 220.980, 159.562) - mm* *(-3.622, 8.700, 6.282) - in*	*(-91.998, 220.980, 159.562)* *(-3.622, 8.700, 6.282)*	*(-66.598, 220.980, 159.562)* *(-2.622, 8.700, 6.282)*	*(-66.598, 220.980, 159.562)* *(-2.622, 8.700, 6.282)*	*(-91.998, 220.980, 159.562)* *(-3.622, 8.700, 6.282)*
Tie rod Outer Ball Joint	*OptK in inches:* *(-2.3136, 21.965, 7.615)*	*(-69.621, 561.391, 69.596)* *(-2.741, 22.102, 7.641)*	*(-72.288, 561.569, 193.852)* *(-2.846, 22.109, 7.642)*	*-60.706, 549.504, 192.278)* *(-2.390, 21.634, 7.570)*	*(-65.862, 562.127, 194.208)* *(-2.593, 22.131, 7.646)*	*(-66.904, 561.213, 194.056)* *(-2.634, 22.095, 7.640)*

Pivot point	*[x: 22.88, y: 7.76, z: 0]*	*[x: 22.88, y: 7.76, z: 0]*	*[x: 22.88, y: 7.76, z: 0]*	*[x: 22.88, y: 7.76, z: 0]*	*[x: 22.88, y: 7.76, z: 0]*	*[x: 22.88, y: 7.76, z: 0]*

Sketches/Drawings/Screenshots

I'll take note of this here, I'm going to refrain from re-running some of the simulations from the PDR cause it's redundant, explanation below.

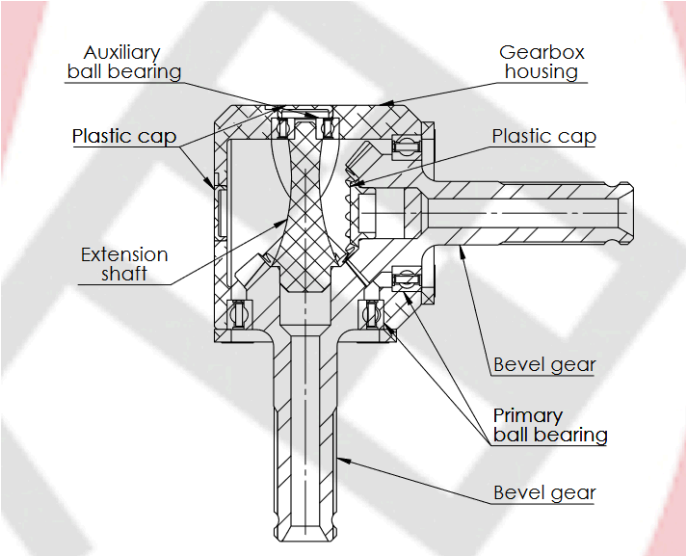

MMSG Module 2~4

Ground Spiral Miter Gears



Specifications	
Precision grade	JIS B 1704: 1978 grade 1*
Gear teeth	Gleason
Pressure angle	20°
Helix angle	35°
Material	SCM415
Heat treatment	Tooth area carburized
Tooth hardness	55 to 60HRC

* The precision grade of J Series products is equivalent to the value shown in the table.

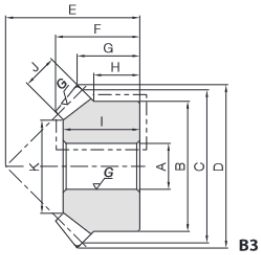

Spur Gears | Helical Gears | Internal Gears | Racks | P Racks & Pinions

Catalog Number	Gear Ratio	No. of teeth	Shape	Direction of spiral	Bore A_{H7}	Hub dia. B	Pitch dia. C	Outside dia. D	Mounting distance E	Total length F	Crown to back G	Hub width H	Hole length I	Face width J	Holding surface dia. K	Allowable torque (N-m) Bending strength	Allowable torque (N-m) Surface durability	Allowable torque (kgf-m) Bending strength	Allowable torque (kgf-m) Surface durability	Backlash (mm)	Weight (kg)
MMSG2-20R MMSG2-20L	1	20	B3	R L	12	35	40	42.7	35	21.98	16.35	12.5	20	9	24.54	17.0	23.5	1.73	2.40	0.04~0.10	0.14
MMSG2.5-20R MMSG2.5-20L				R L	14	42	50	53.2	45	28.63	21.6	16	26	11	30.89	32.7	46.1	3.33	4.70	0.05~0.11	0.27
MMSG3-20R MMSG3-20L				R L	16	52	60	63.99	50	30.78	21.99	16	27	14	34.4	58.5	83.7	5.97	8.54	0.06~0.12	0.43
MMSG3.5-20R MMSG3.5-20L			B4	R L	20	50	70	74.53	55	32.45	22.26	14	29	16	42.75	91.8	133	9.36	13.6	0.07~0.13	0.51
MMSG4-20R MMSG4-20L				R L	20	55	80	84.99	65	39.13	27.5	17	35	18	49.08	136	199	13.8	20.3	0.09~0.15	0.80

JIS grade (AISI/ SAE)*4	Chemical composition(%)					Tensile test		Brinell hardness	Heat treatment(°C)		Carbon*2 equivalent	Weldability*3
	C	Si	Mn	Cr	Mo	Tensile strength (MPa)	Elongation (%)		Quenching	Tempering		
SCM415 (-)	0.13 ~0.18	0.15 ~0.35	0.60 ~0.90	0.90 ~1.20	0.15 ~0.25	≧830	≧16	235 ~321	1st 850~900 Oil cooling 2nd 800~850 Oil cooling	150~200 Air cooling	0.56	△

FEA/CFD/Simulations

Anisotropic Properties:

https://proto3000.com/materials/dmls-aluminum-2/

https://xometry.pro/wp-content/uploads/2023/08/Aluminium-Al-Si10Mg.pdf

https://www.materialise.com/en/industrial/3d-printing-materials/aluminum

Property	Value	Units
Elastic Modulus in X	6.900000067e+10	N/m^2
Elastic Modulus in Y	6.900000067e+10	N/m^2
Elastic Modulus in Z	6.900000067e+10	N/m^2
Poisson's Ratio in XY	0.33	N/A
Poisson's Ratio in YZ	0.33	N/A
Poisson's Ratio in XZ	0.33	N/A
Shear Modulus in XY	2.600000013e+10	N/m^2
Shear Modulus in YZ		N/m^2
Shear Modulus in XZ		N/m^2
Mass Density	2700	kg/m^3
Tensile Strength in X	450000000	N/m^2
Tensile Strength in Y	460000000	N/m^2
Compressive Strength in X		N/m^2
Compressive Strength in Y		N/m^2
Shear Strength in XY		N/m^2

Seeing as the steering forces aren't changing since the bevel box isn't, I'm not going to rerun those PDR sims here. The drop in rack ratio will also change the moment about the rack, but doesn't do anything to change the bevel box forces (this will, though, increase the rack lifespan by about ~30%, which is cool).

I do plan on top-oping the bevel box mounting brackets at a later date since they're already wayyy too thick for all intents and purposes (FoS ~3), but the necessary design work for them to actually go on the car is done. Cutting material here from the aluminum is more of an accessory change that I know I can get away with, not something that will affect the overall performance, so it's not going to be listed here for a while. Solidworks is being a pain in the ass with the load case and remote forces so it probably wont be done until check-in.

You do now, though, get some nice weld analysis of the rack tabs and gears plus updated bracket sims.

Pictures:	
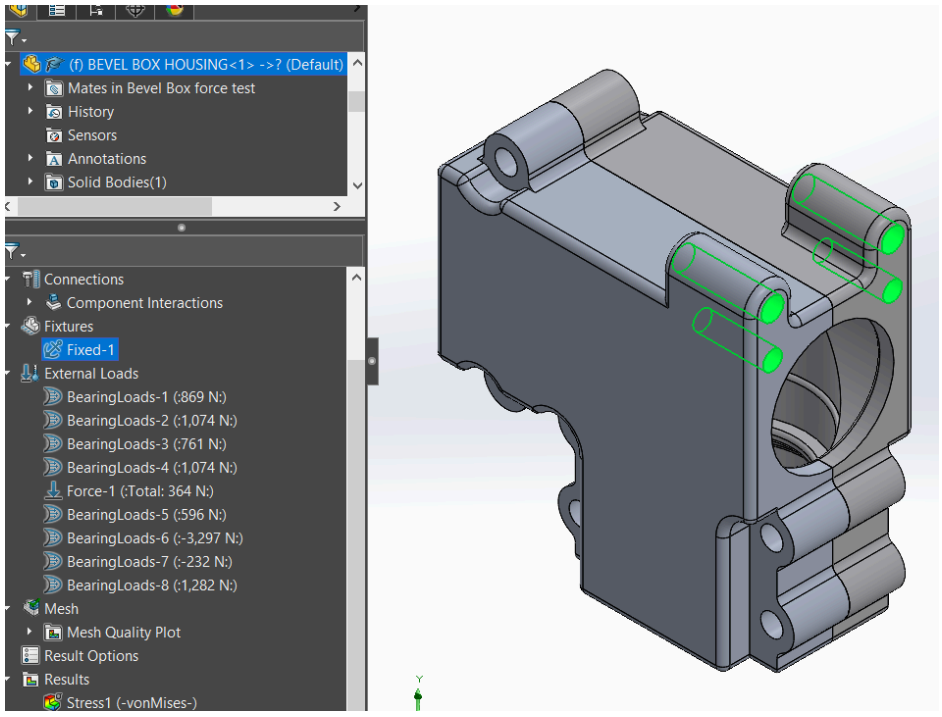	Fixtures Fixed by the Truss Screws.
	Forces Bearing forces on all bearing locations. The regular forces come from the axial force retaining the tapered roller bearing. Force calculations were obtained in the WAP SUS Calculations

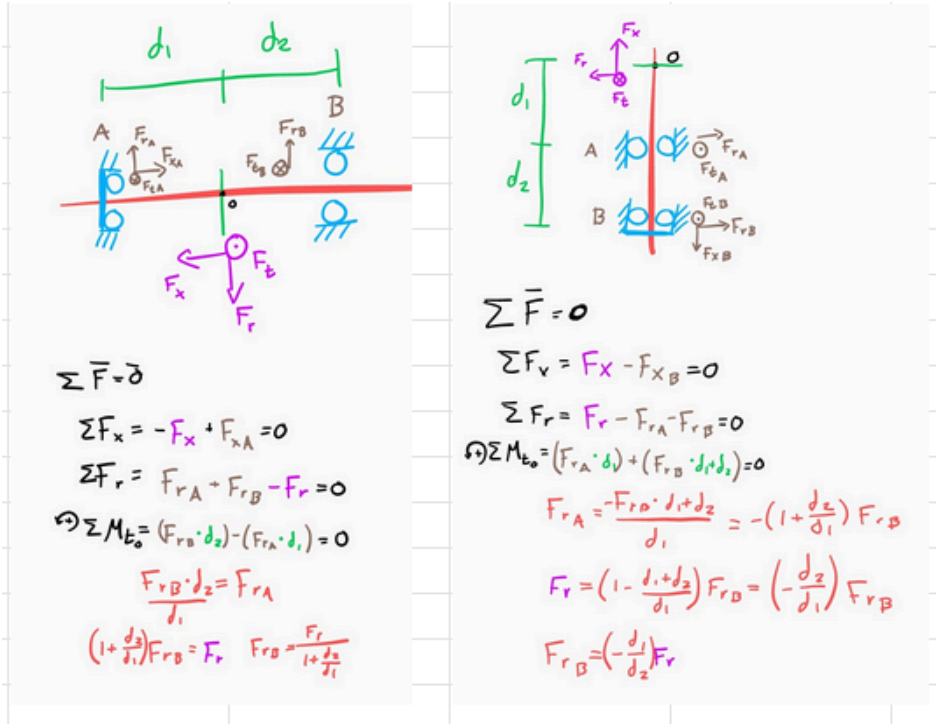

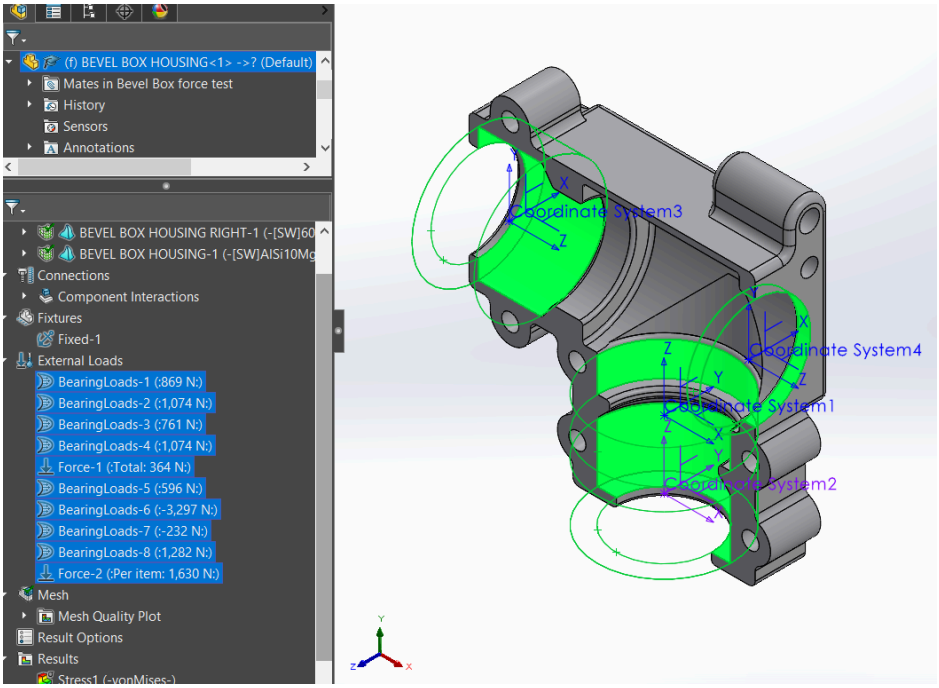

Steering Column Forces Tab

SUSPENSION CAL...

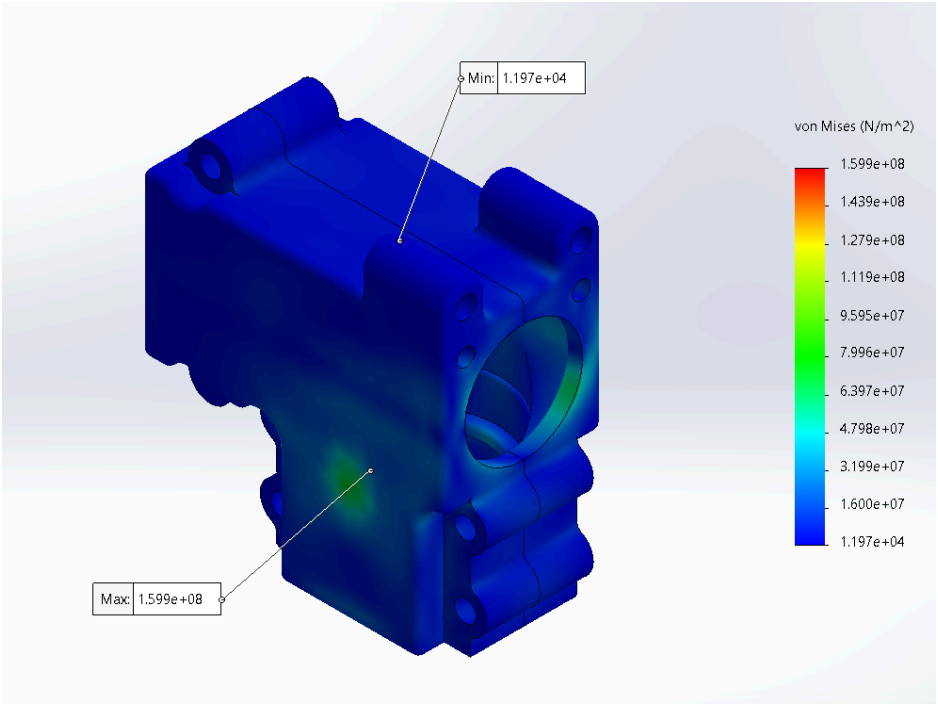

Von Mises stress [Kpi]

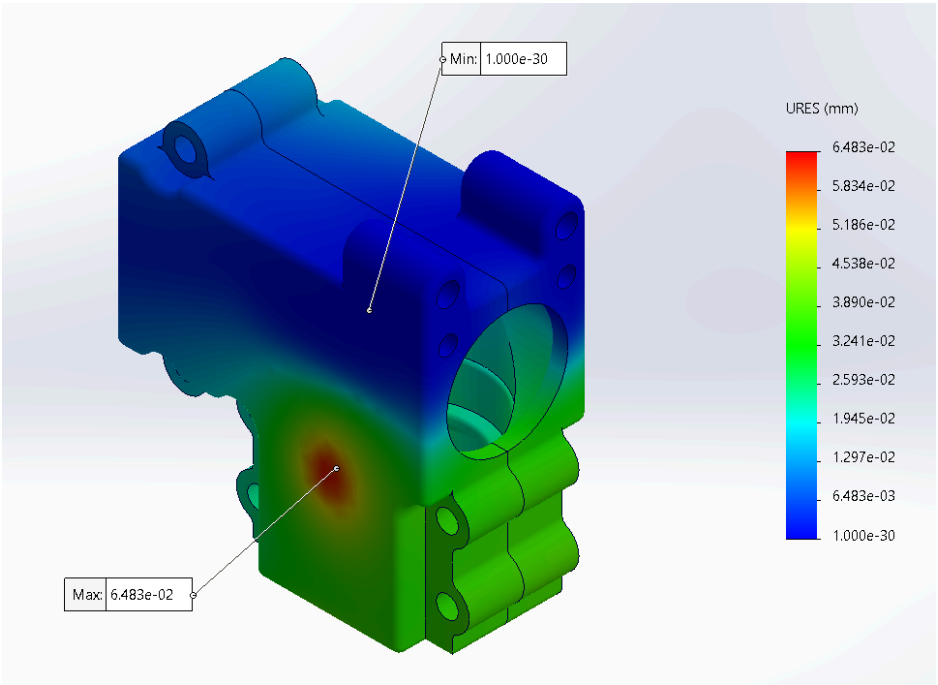

Displacement [in]

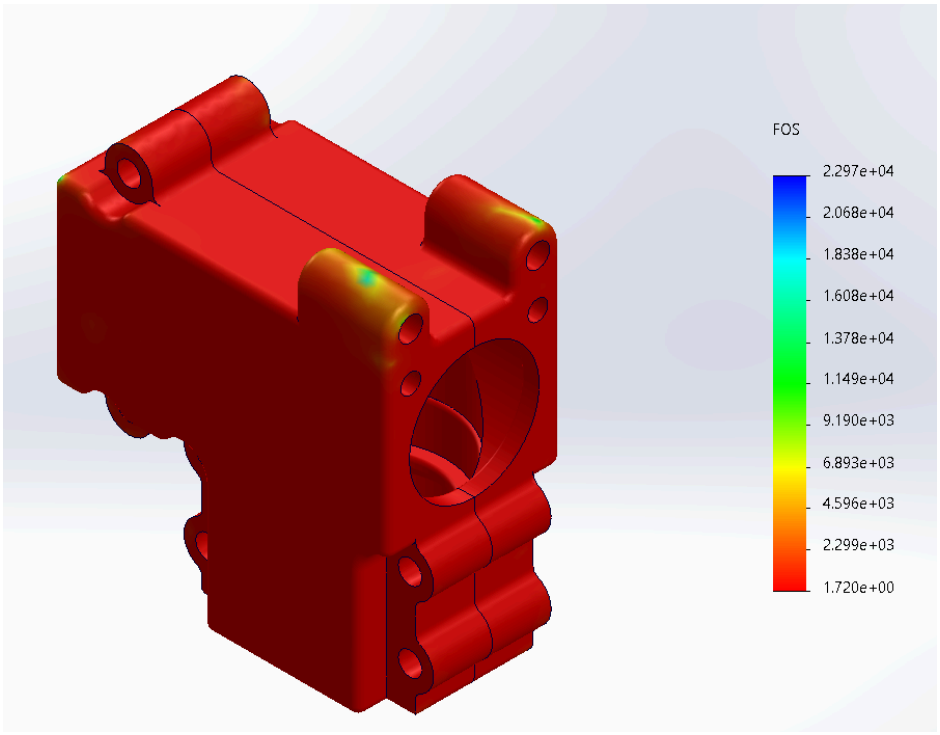	Factor of safety One thing to add is that the forces added had a 1.5 FOS already included

Notes:

Pictures:	

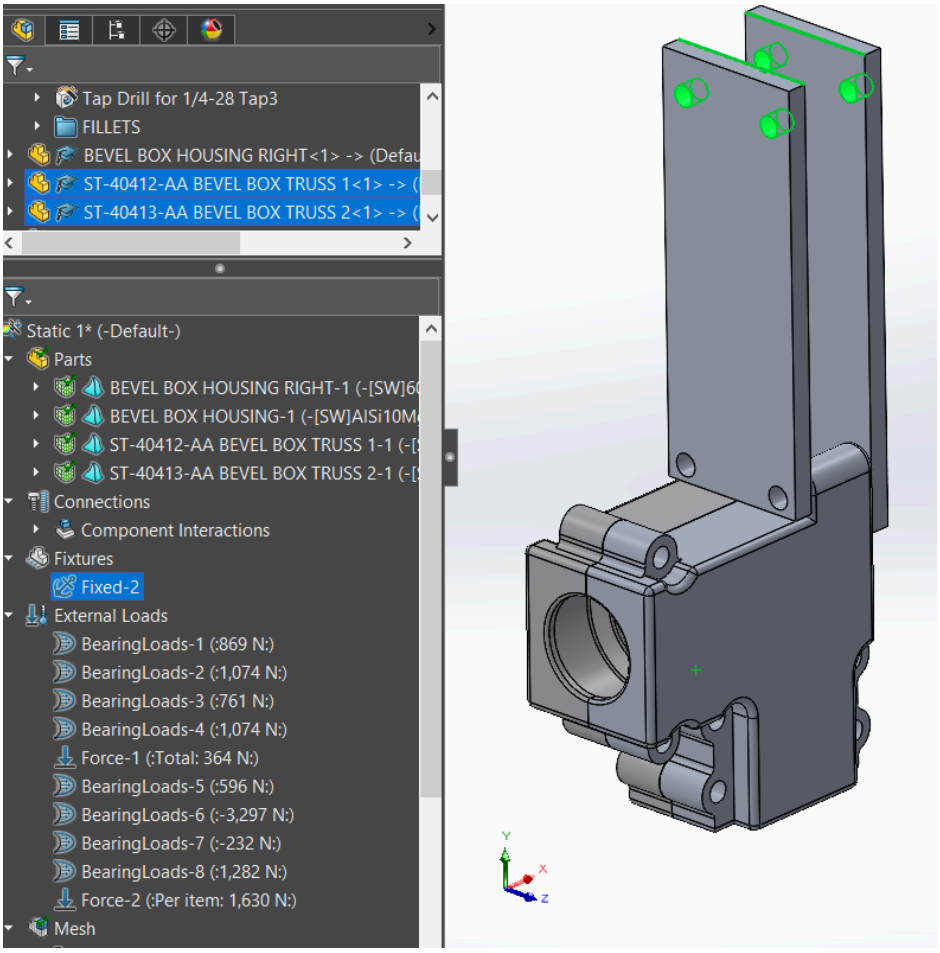

Fixtures

Fixed by the Truss Screws on the frame beam.

Forces

Bearing forces on all bearing locations. The regular forces come from the axial force retaining the tapered roller bearing.

Force calculations were obtained in the WAP SUS Calculations Steering Column Forces Tab

SUSPENSION CAL...

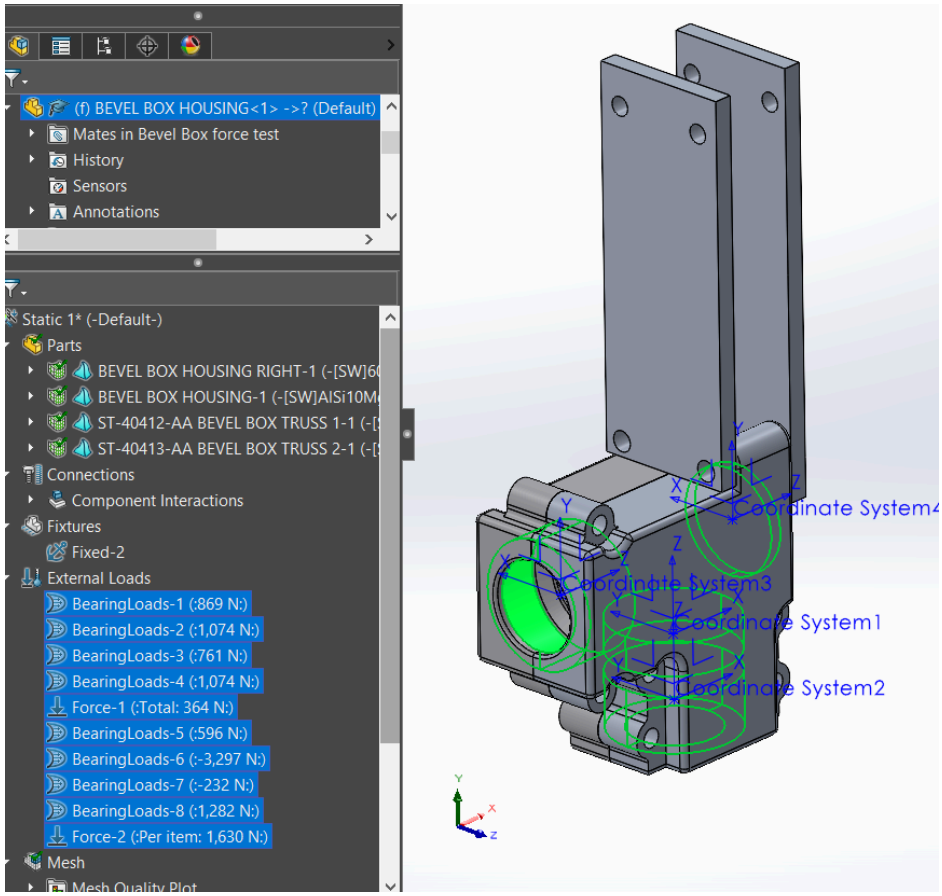

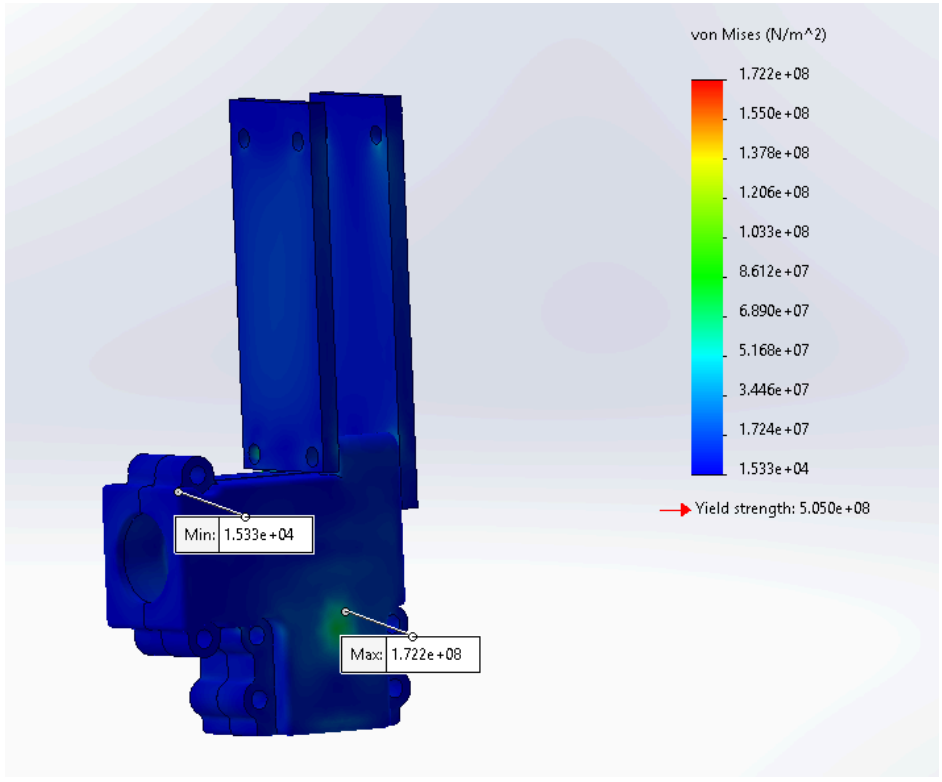

Von Mises stress [Kpi]

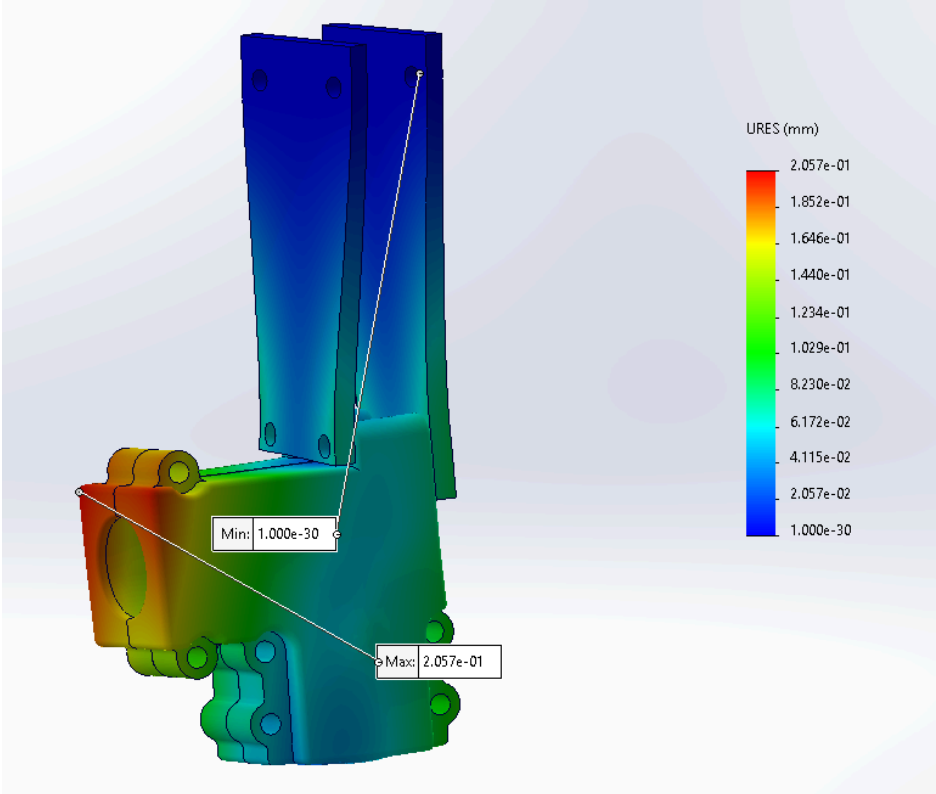

Displacement [in]

By small angle approximation the angle of the **deflection is on the order of 0.141 deg**

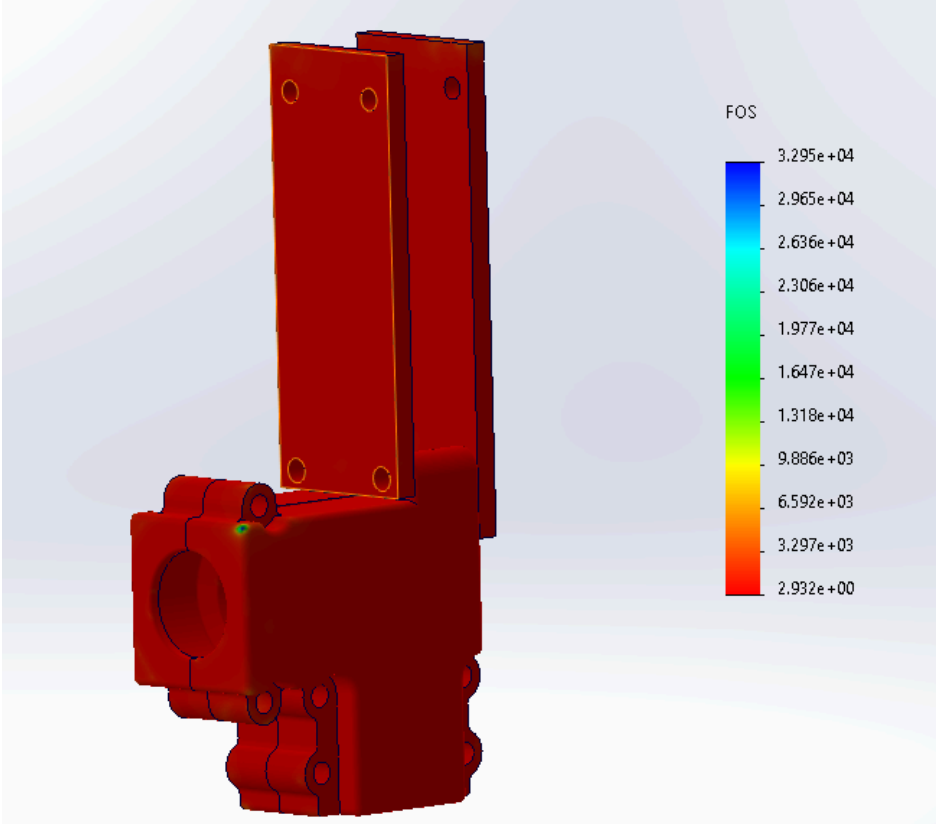

Factor of safety

One thing to add is that the forces added had a 1.5 FOS already included

So like, yeahhh it's excessive.

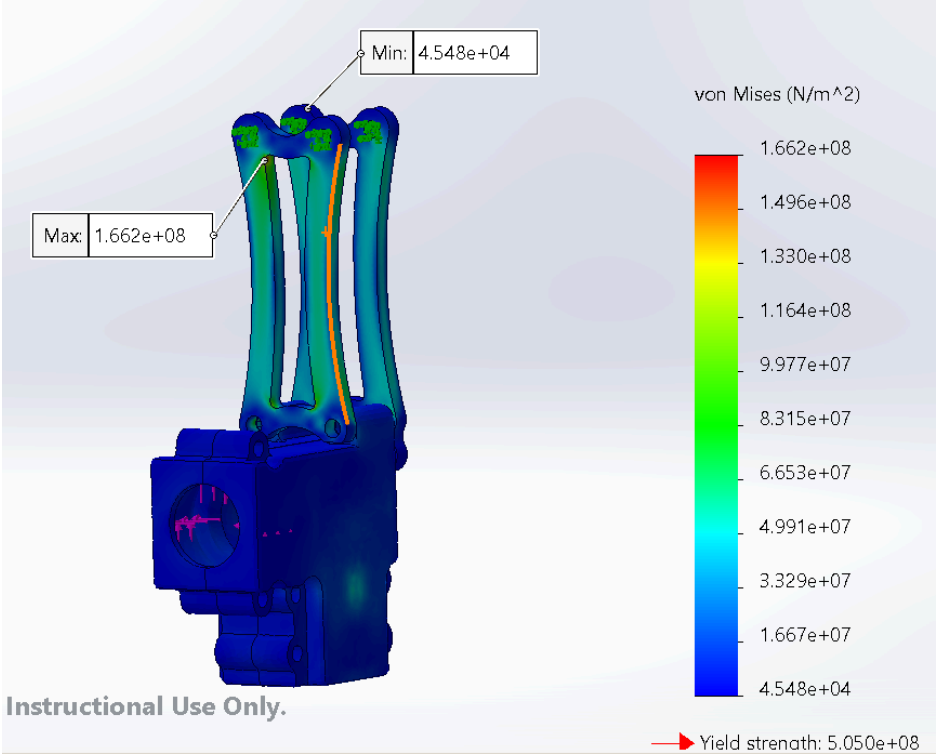

Weight Optimized Version.

Stress is def higher but it won't yield. Tried to do a fatigue analysis but solidworks said the stress isn't high enough to get an accurate result lol.

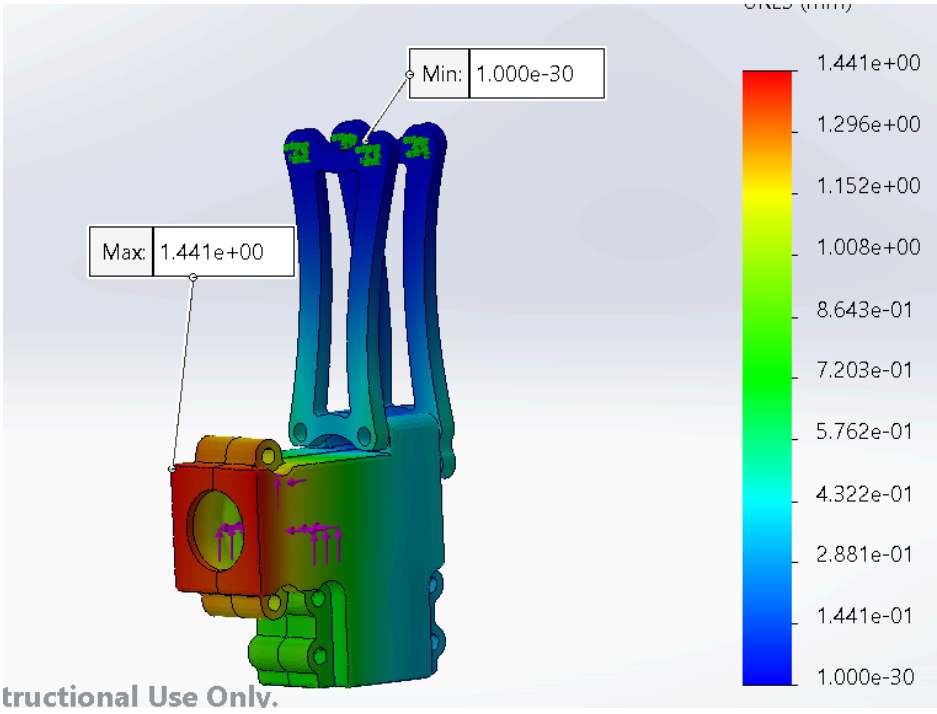

Displacement doesn't seem to change too significantly so there shouldn't be any added backlash.

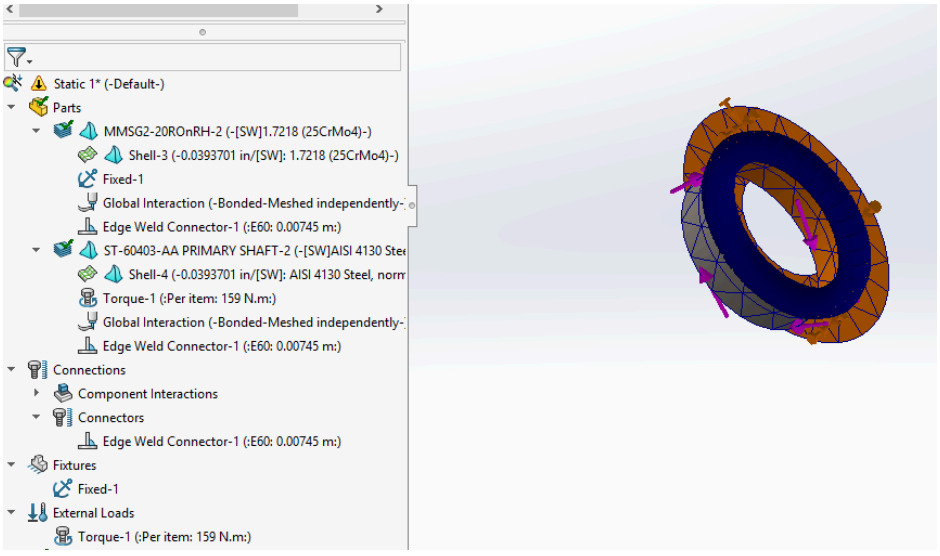

Bearing + Primary shaft shell

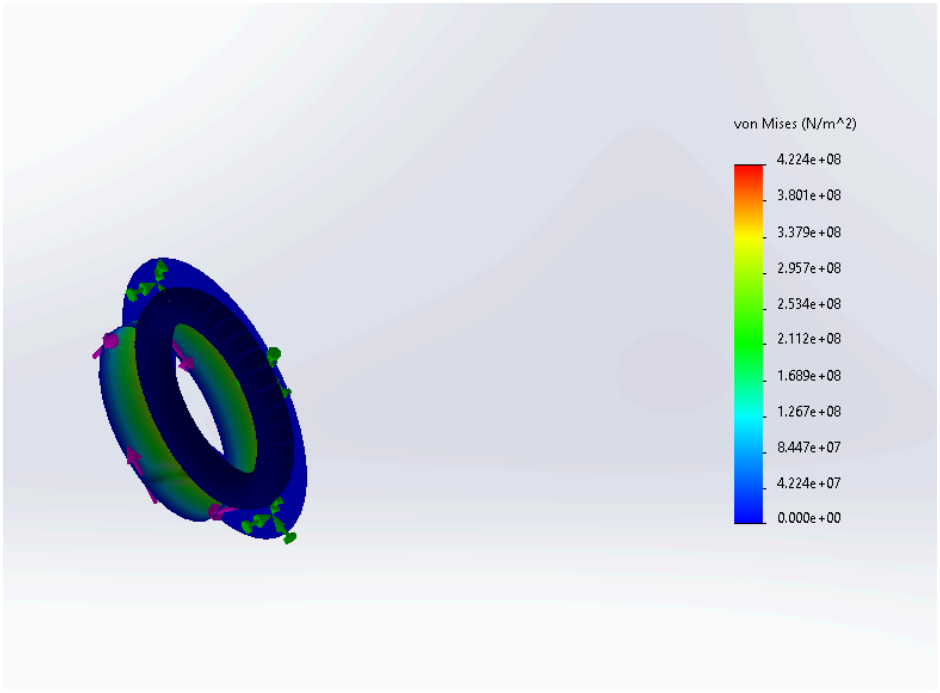

@ max parked scrub

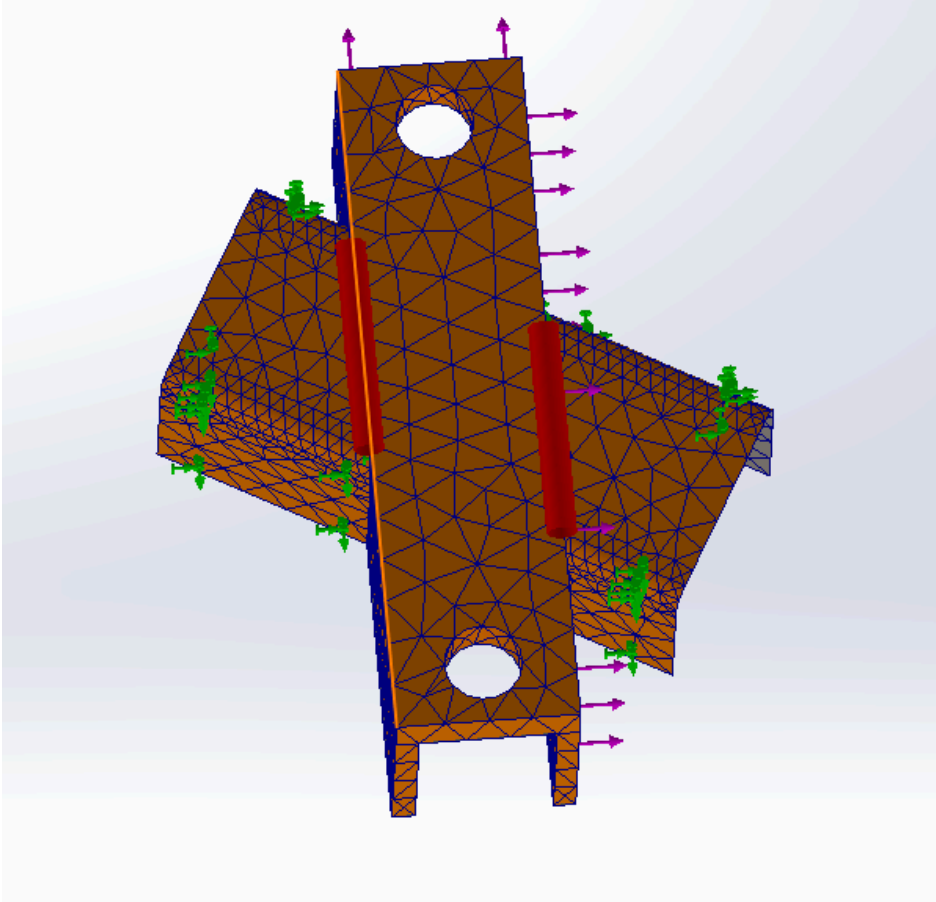

Solidworks doesn't let you analyse welds that aren't 90 degrees, so this is only the top weld contribution

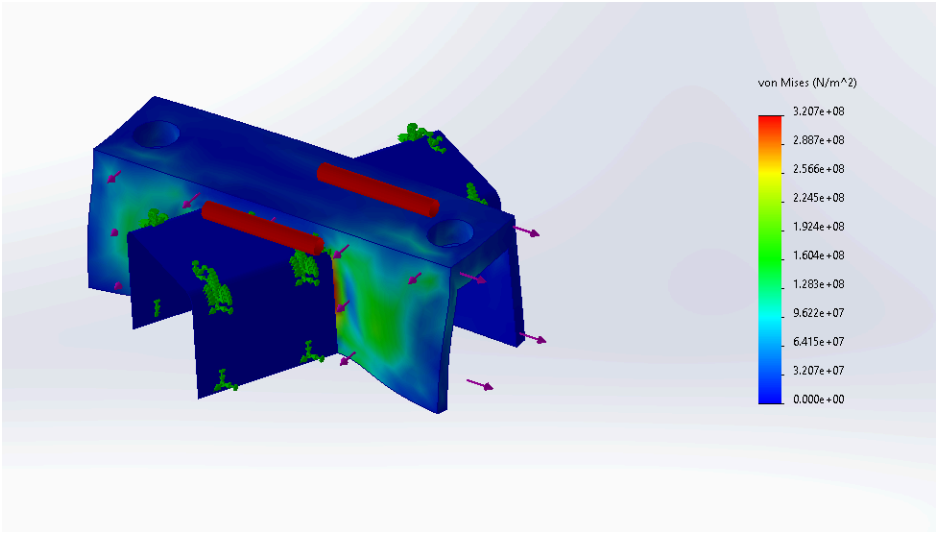

Expected there's a huge stress concentration where there isn't a weld but still a mesh interaction there.

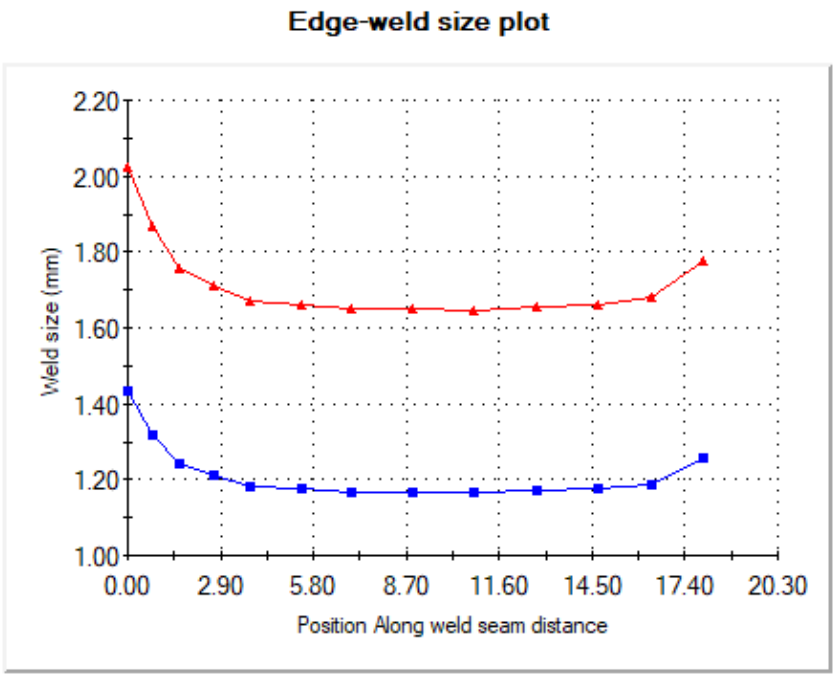

Type	Min	Max	Mean
Weld size (mm)	0.26807	2.0256	0.96008
Weld throat size (mm)	0.18955	1.4323	0.67888
Joint normal force (N/m)	-4,755.5	4,698	104.79
Shear-Weld axis force (N/m)	-16,086	16,550	71.72
Shear-Surface normal force (N/m)	0	0	0
Bending moment (N.m/m)	-24.47	29.858	0.66041

Contributes a pretty solid amount ig lol

I did hand calcs which are below to hopefully give a better rough estimate of what these welds can handle.

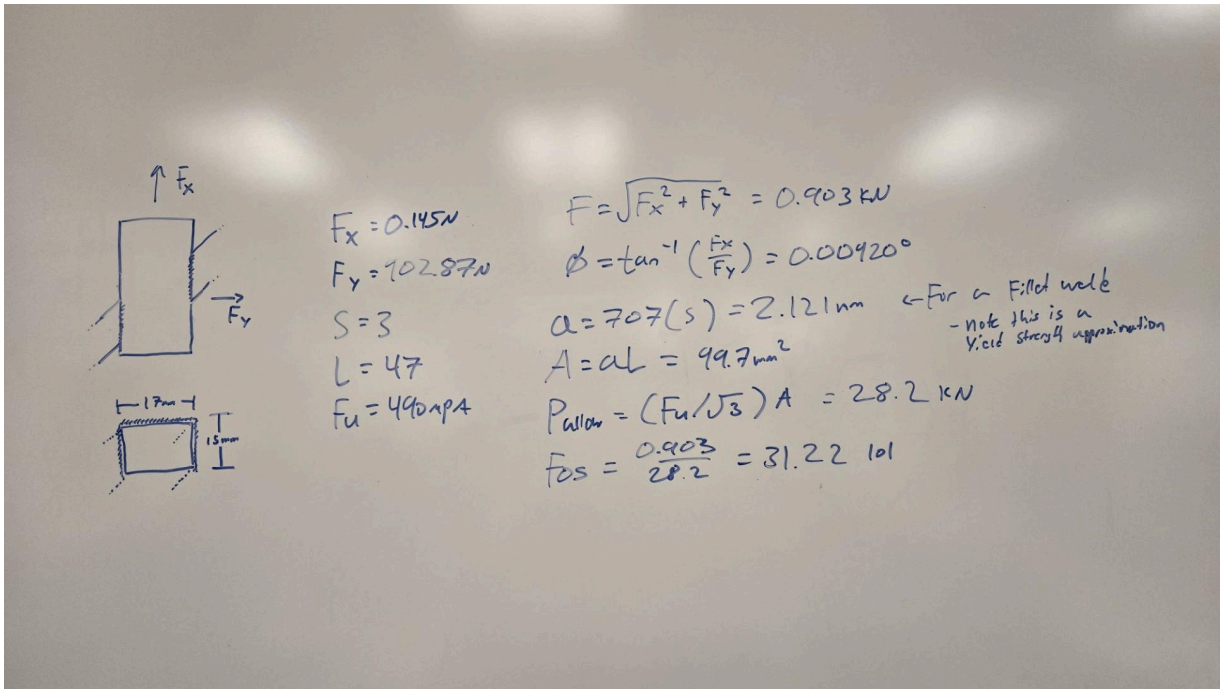

The calculation above is a Young's modulus approximation for the yield strength of the rack tab.

SOLID SHAFT SHEAR STRESS AND ANGULAR DEFLECTION CALCULATOR

Enter moment, diameter and length values, select your material and units as required. Your result will display.

MOMENT:	33	Newton-Meter
DIAMETER:	.015	Meter
LENGTH:	0.045	Meter
MATERIAL:	Steel, Carbon	
SHEAR STRESS:	49.7978	MPa
ANGULAR DEFLECTION:	0.2223	Degrees

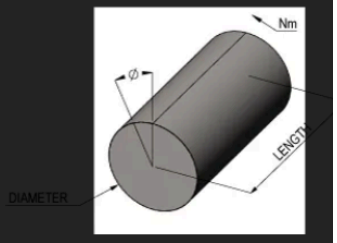



Compliance of the system, including the backlash from the Bevelbox and rack. [tube deflection, bevel box backlash, and rack backlash], it becomes stiffer as the backlash becomes a smaller and smaller part of the system as the aligning moment increases.

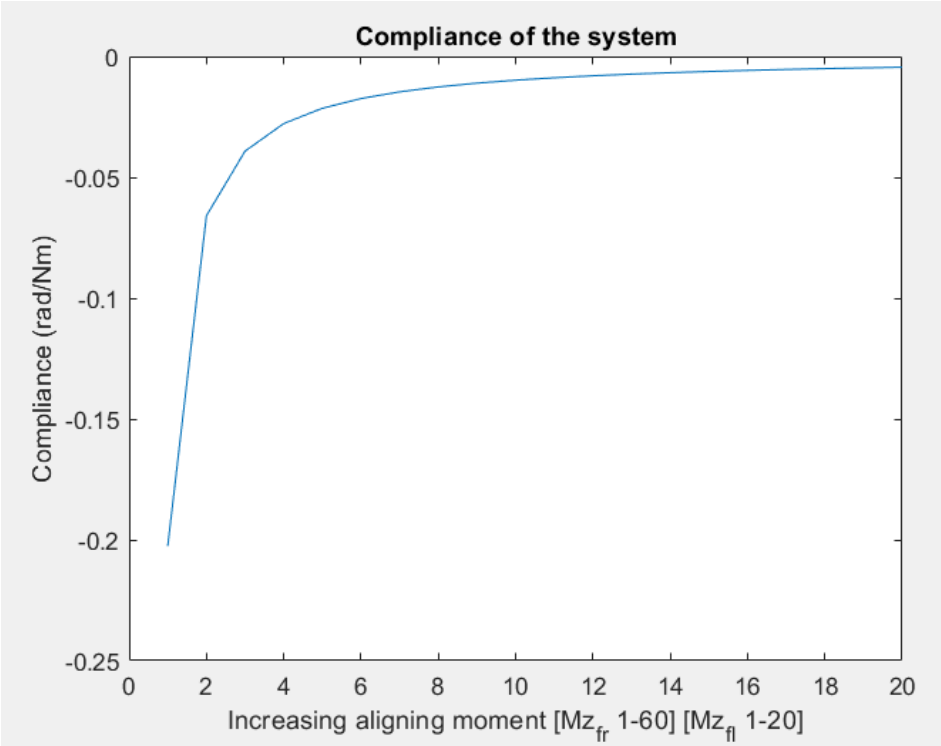

Altium/Electronics

Prototypes/Experiments

- *Different steel wheel angle / steering wheel force*
- *Seeing angles for skidpad*
- *TO make arm adjustable on steering arm, it would be a triangle so we machine*
- *Adjustable ackermann / steering geometry*
- *Rack position*
- *Steering arm length*
- *Tie rod upright and rack*

Resources (research papers/textbooks/websites/etc.)

NARRco Rack Documentation, including the best ways to mount it, useful rod angle, and load capacity.

https://cdn.shopify.com/s/files/1/0368/1989/files/NARRco_Rack_Mk_II_14.4_T13_181108.pdf?6

Bevel Gearbox Documentation, a published article discussing the challenges behind gear installation and the best methods. Here is where I took the idea of shims.

https://www.geartechnology.com/ext/resources/issues/0613x/bevel-gear-installation.pdf

Past published reasonings for our designs, largely outdated, but it does talk about the drawbacks of using a double u-joint design.

https://openscholarship.wustl.edu/cgi/viewcontent.cgi?article=1098&context=mems500

Past decisions for Rack and Column, this helped us determine the best rack manufacturer and column system; however, these were made before we had to deal with the bevel box.

Steering decision

MANUFACTURING

Sketches/Drawings/Screenshots

I dont know why this section is in here twice? See the section under design materials.

Cost

Part	Cost	Manufacturer
Steel tubes	-	Shapiro
Couplers (2)	~60	McMaster
Shafts 4140 or equiv, 12”	~30	McMaster
6065 Aluminum	-	Shapiro
Tapered Bearings (2)	~80	McMaster
Bearings for Box • 30 ID 47 OD • 12 ID	~50	McMaster
KHK Gears (MMSG2)	254.62	KHK
Collar	~20	McMaster
3D Printed Housing	~300	Rapid Direct
NaRRco Rack	600 x2	NaRRco
7075 Aluminum	-	-

Materials

DP420 & glass beads -> We already have.

Material	Where
3d printed Aluminum Housing For housing	Rapid Direct



4130 1in square tube (1.5 FT) For crossbar	Shapiro or https://www.stockcarsteel.com/4130-Chromoly-Square-Tubing?quantity=1&custcol_mhi_thickness_option=36
7075 PLATE (.3IN THICKNESS, 5IN*5IN) For truss	We probably have or https://www.grainger.com/product/GRAINGER-APPROVED-Aluminum-Plate-7075-T651-786DF0
7075 ROD (0.625 DIAM) For endcaps	We probably have or https://www.grainger.com/product/GRAINGER-APPROVED-Aluminum-Rod-7075-1-in-Outside-783HX8
6061 ROD (1.5 DIAM) For tophats	We probably have or https://www.grainger.com/product/GRAINGER-APPROVED-Aluminum-Rod-6061-1-1-2-in-783J33
4130 BAR For rack tabs	We probably have or https://www.shapirosupply.com/1018-cold-roll-solid-rd-br-3-1-4-x-60-12638.html
4130 Tubes For lower and upper tubes	https://www.shapirosupply.com/dom-steel-round-tubing-3-4-x-065-x-72-alloy-4155.html
4130 ROD For Shafts	https://www.onlinemetals.com/en/buy/carbon-steel/2-carbon-steel-round-bar-a36-hot-rolled/pid/10256
4130 plate For upper steering tube tab	https://www.amazon.com/2TwentyTwo-Steel-Designs-Plate-A36/dp/B0753J52KM
0.625 OD Carbon tubes For Tie Rods	https://www.clearwatercomposites.com/product/1-2-x-5-8-ultra-high-modulus-carbon-fiber-tube/

Manufacturing Process

- Laser Sintering (AlSi10Mg) for Housing
- Gear manufacturing by KHK
- Anodizing aluminum mounts

Part Approval Process (PAP)

- Concentricity is key for this system. So ensuring that parts are axial to each other is a key specification.
    - Custom 3D printed fixtures are designed to hold the parts in place during assembly. Proper datums and feature tolerancing are used to ensure circles that should line up are properly aligned.
- Additionally measuring the mounting distance is really important. To measure it we can use the CAD distance from wall to gear and observe the difference in real life, and sand shims to accommodate.

TIMELINE

Aug 5: PDR Date

Oct 31: FDR Date (will 100% be pushed back)

- *Bevel Box is 3D printed. If we're buying a new one, we should probably order shortly after the FDR(???), as I don't know the lead time on it.*
- *Chances are we're not reordering*

Nov 10: Drawings sent to manufacturing

- *Waterjet parts submitted by next waterjet run*

Nov 10: All components purchased

TBD: All components received

First week of Jan: Subsystem assembled off car

Last week of Jan: Subsystem assembled on car

NOTES FOR FUTURE ITERATIONS

Lessons Learned

There are a lot of assumptions made years prior that have trickled down to various parts of the design. Particularly until now, the way we have calculated our Ackermann has been lacking; it is generally a small part of cornering, but it still plays a role in driver feel, so it is important that more thought is taken into its design.

I think the bevel box improvements from last year made the system more reliable, but we really should spend more time, again, looking into ways to reduce backlash in the system.

Future Plans

Look into Anti-Ackermann steering and improving the modeling for both corner entry simulation and full lap simulation. It doesn't assume we're breaking while making the turn, nor do we have values for the Z-Bar roll stiffness, so there isn't any longitudinal load transfer going on.

I'd say the most important thing to note for next year is definitely fixing the logic we use to come to maximum turn angles. It's not that it's necessarily a bad thing to have these figures be a product of wheel barrel fitment and being able to make the minimum corner turn; in fact, these are valid design considerations, but they aren't the ones that maximize vehicle performance with the setup we have now.

More on this, it's really not best to think of Ideal Ackermann by its definition as a geometrically idealized condition where the inside tire does not slip, ie, the inside tire defines the radius. It's better just to think of it as a byproduct of the steering geometry in the form of a function and not as some ideal value. Better put, what it is NOT is a design target per se; what it IS is a value you use to predict steering behavior. 60 to 80 percent Ackermann might be an acceptable range that most people consider okay in the context of FSAE (its nice to think about conceptually since it works well in low-speed corners generally), but in actuality, this range is more or less bullshit, as it's kinda just "use what people think works" reasoning. This is silly (even more so when you consider tolerance and the fact that Ackermann changes throughout steering).



What really should be happening is determining the max steering angles through how much slip angle the tires actually want in a turn, since the point of Ackermann should be to take best advantage of this. There simply is no magical range; it's about making an educated assumption about what makes the tires most happy. I think looking into anti-Ackermann, or just a reevaluation of how our tires should be affecting steering, should be priority number one in terms of squeezing as much performance out of the current steering system as possible before we evaluate different options or more major design changes.

This is also why I think better models, or at least consideration into adjustable / neg Ackermann, is a super beneficial step 2 (toe can be used as a bandaid for slip angle, but really shouldn't). The best way to compare here is to just get data and see what the tire likes, so if we can better understand what effect Ackermann has on the tires, the better.

All in all, gotta remove that disconnect between the relation of steering angle and slip angle as it stands currently.

TESTING VERIFICATION AND VALIDATION

Component Testing

- We need to test the strength of the column using a torson test.
    - The deflection overall should be at most 1 deg with 33 Nm
    - To do this we can mount the Upper or Lower column into a vice and torsion with a clamp wrench and a known weight.
- Carbon tube Instron Test
    - The glue from the carbon tubes should hold a parked scrub force

Part Testing

- Mu_y Test
    - A large part of the forces and simulations came from the assumption that the Mu_y was around ~1.2
    - We can lock a single tire, load it with some weight, and try to roll it by pulling until it scrubs. If we know the Fx and the Fz, then we can get an approximation for mu_x_kinetic and scale the tire consortium data by that amount.
    - We can then verify our simulations from there.
- Steering Ratio
    - While off the ground we can validate the steering ratio using the potentiometer and the alignment set up.
    - If it is too far from expected we can correct our simulations or if it is really bad, we can talk about remaking the Uprights with a steer arm mount.

Full Car Testing

1. **Dynamic Steering Check:**

- **Purpose:** Evaluate the steering response and stability while the car is in motion.

- **Procedure:** Drive the car at low speeds and perform various steering inputs, including slaloms and figure-eight maneuvers. Observe for any delays, oscillations, or instability in the steering response.

-** Sensors:** Utilize the Steering Potentiometer, Shock Potentiometers, Front and Back Accelerometers

For slaloms: Front and Back Accelerometers should have a slight delay between the sine wave from their respective movement. If we plot Front in y-axis and Back in x-axis, ideally we would obtain a straight line, so we should see how offset from a straight line they are.

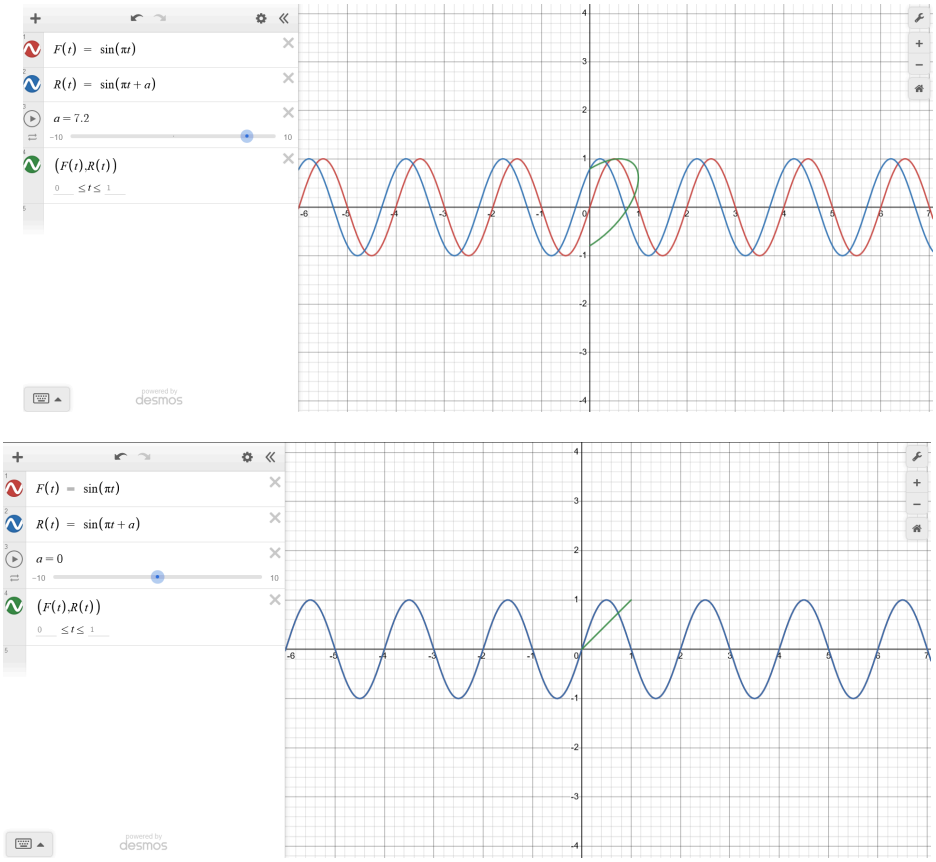

For figure 8's: We can observe any distinction between right and left turning in the steering, seeing if there is some discrepancy between the limit of the two. Using the shock pots we can verify if it is a problem with the steering only rather than the suspension.

-**If not working:** (give up) Fix any binding

For slaloms: If we do not see close to a straight line, it could be a problem of weight distribution while turning, so we can set the rear ARB loose.

For figure 8's: If we are having problems with getting the right amount of turning, we can extend the toe links on one side.



2. **Understeer Gradient Test:**

- Purpose: Validate our models for the understeer gradient.
- Procedure: Start from idle and slowly increase speed so that the SR is almost 0, aka close to steady state.

Maintenance and Repairs

Health of the system can be determined by taking care of fatiguing elements or over binding elements:

- Rod ends should be checked for rattling to prevent shock loads, ideally this should be done every time we align.
- Slack in the Rack is a sign of slight yielding, it may last longer but steering becomes more unresponsive, this should be checked every time we go testing.
- Making a clear rule to not scrub the wheels while parked, this causes a significant load that can cause damage and slight yielding.
- The Box should be greased and kept clean from debris.
- Welds should be monitored for crack damage ideally every time after testing.

Over-binding may be fixed by sanding or extending shims.



TECHNICAL ORGANIZATION

Item	Description	Needs Work	Pass
BOM	Are parts, materials, and fasteners in the Bill of Materials spreadsheet? Do parts have correct Part Numbers? Does it follow the correct Cost Report categories? Are quantities and vendors correct?	☐	☑
COM	Are parts, materials, and fasteners in the Center of Mass spreadsheet?	☐	☐
CAD	Does it follow good modeling practices (named parts and folders in the tree, proper mates instead of fixed components)? Does it have rebuild errors? Does it have Full Car Model (FCM) configurations? Is it placed in relation to the frame planes correctly? Are all components in the CAD? Does it match its real life counterpart? Are part properties filled out? Intersections?	☑	☐
Drawings	Do all parts have drawings? Have all machined parts been reviewed? Do drawings follow team standards? Do all assemblies have drawings? Have leads signed off on drawings? Are tolerances considered for machining, fitment, and stacking? Are bounding boxes listed?	☐	☐
File Organization	Are the files on Box the most up to date versions? Do they have the correct file names, with part numbers matching the BOM? Are they in the appropriate folder? Are there excess/unorganized files?	☐	☑
Owners Manual	Is assembly and maintenance described in the owner's manual? Could a new member assemble and maintain this design?	☐	☐
Drawing Review Submission	Are all of the drawings reviewed on Canvas?	☐	☐
Manufacturing Form	Are all the drawings for waterjet/in-house manufacturing submitted to the manufacturing form?	☐	☐
Component Testing Tracker	Is there a plan for component testing? If there is, is it in the component testing tracker? Is it fully filled out?	☐	☐

Notes:



SIGNATURES

Designer(s): _____

System Lead(s): _____

Exec Member: _____

Exec Member: _____