NOTES:
1. DEBURR ALL SHARP EDGES

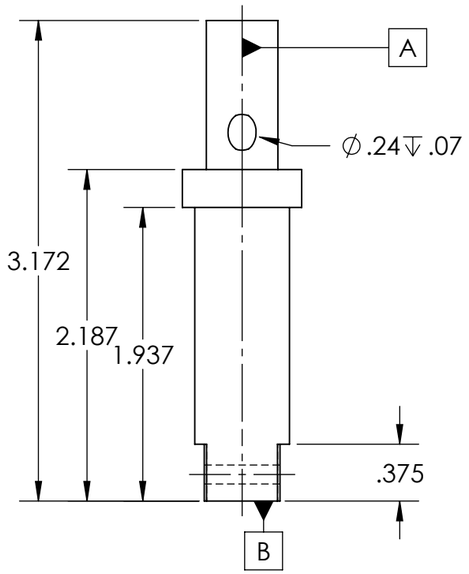

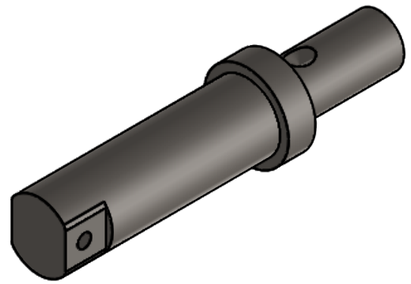

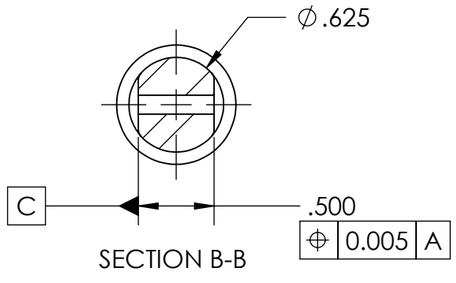

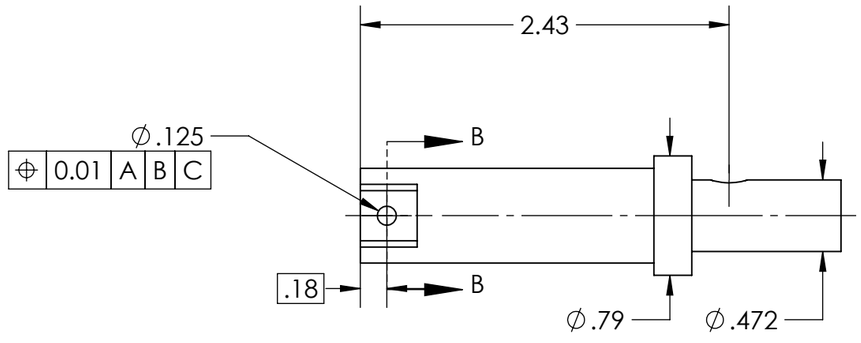

UNLESS OTHERWISE SPECIFIED DIMENSIONS ARE IN INCHES AND TOLERANCES ARE: DECIMALS .X ± .1 .XX ± .01 .XXX ± .005	MATERIAL:	AISI 4130 Steel	
	FINISH:	AS MANUFACTURED	
	QTY REQUESTED: 1	WEIGHT: 0.25 lb	
PROPRIETARY AND CONFIDENTIAL THE INFORMATION CONTAINED IN THIS DRAWING IS THE SOLE PROPERTY OF WASHU RACING. ANY REPRODUCTION WRITTEN PERMISSION OF WASHU RACING IS PROHIBITED.	THIRD ANGLE PROJECTION		

APPROVAL:	DATE:	WashU
PREPARED BY: L. LEE	10/19/2026	TITLE: Secondary Shaft
SYSTEM LEAD: J.KOEPPEL	10/22/2026	
MANUFACTURING:		SIZE B | PART NO. ST-70406 | REV AA
QUALITY CONTROL:		UNITS: IPS | SCALE 1:1 | SHEET 1 OF 1

SOLIDWORKS Educational Product. For Instructional Use Only.